ROTARY "MARK 2" WHEELCHAIR BROCHURE

Table of Contents Page

1. Image of the "Mark 2" chair 2
2. Image of the Parts required 3
3. Reasons behind the design 4
4. Wheelchair MK2 General Assembly (S300) 6
5. Metal Parts
   - 5.1 Side Plate (S103) 9
   - 5.2 Handle Tube (S104) 11
   - 5.3 Center Frame Vertical (S155) 12
   - 5.4 Center Frame Bottom (S156) 13
   - 5.5 Center Frame Top (S157) 14
   - 5.6 Hinge (S158) 15
   - 5.7 Top and Bottom Lift Plate (S350) 16
   - 5.8 Brake Box (S174) 17
   - 5.9 Brake Block (S173) 18
   - 5.10 Brake Handle (S175) 19
   - 5.11 Caster Plate (S125) 20
   - 5.12 Caster Tube (S377) 21
   - 5.13 Strut, Roller Bar, 18-inch (S306) 22
   - 5.14 Roller Slide Bar (S378) 23
   - 5.15 Roller (S379) 24
   - 5.16 Axle Support – Insert (S380) 25
   - 5.17 Doubling Plate (S602) 26
   - 5.18 Foot Rest Top Tube (S603) 27
   - 5.19 Foot Rest Vertical Plate (S117) 28
6. Woods Parts
   - 6.1 Brake Knob (S605) 29
   - 6.2 Wood Foot Rest (S604) 30
   - 6.3 Back Rest Slat (S369) 31
   - 6.4 Seat Base 18-inch (S362) 32
   - 6.5 Brake Box Spacer (S177) 33
   - 6.6 Ball Handle (S170) 34
   - 6.7 Arm Rest (S164) 35
7. Sub Assemblies
   - 7.1 Total and Bottom Plate and Hinges (S505) 36
   - 7.2 Centre Frame (S507) 37
   - 7.3 Brake (S515) 38
   - 7.4 Side Plate (S516) 39
   - 7.5 Slider (S517) 40
8. Fasteners and Hardware (Schedule D) 41
9. Raw Material List 45

03/02/2017

02/18/2017

ROTARY CLUB OF BURLINGTON

WHY WE DESIGNED THE WHEELCHAIR THE WAY WE DID

Peter French, Nov 3, 2017

NOTES ON THE DESIGN FEATURES

1. Use of wood

   . most developing countries have an established furniture industry and a source of hardwoods.

   . the wooden arm rest and other parts can be modified by local ideas to increase the ownership of the wheelchairs.

2. Ball handles

   . most wheelchairs use bent tubular handles

   . accurate tube bending is not easy without special equipment … the tube flattens and the angle-of-bend must be precise.

   . most wheelchairs add a rubber hand grip which deteriorates and slides off.

   . those who have used the ball handles comment that they are very comfortable and very ergonomically suitable.

3. Wooden slats for the back rest and seat

   . all wheelchairs use fabric or high-tech, man-made leather for the seat and back. This is difficult to fasten to the tubes and the fabric tears with use.

   . The hammock-like seat in many chairs is uncomfortable and most users add a cushion. The flat seat readily accommodates a cushion.

   . The slatted back will fold and is very comfortable.

4. Removable footrest

. The footrests on conventional chairs flip up to help access. This lifting motion, using the top of a foot, is not easy to achieve and the handicapped often require help from a care giver. The footrests usually fall back down. A removable footrest solves these problems. However, the user must place it on the floor momentarily while accessing.

. The support tubing for conventional footrests in many chairs, can swing out to provide open, side access. This adds more complexity and cost for a feature that is used infrequently because it cannot be easily activated (a small button to push).

. Many users have lost legs, or have crippled and deformed limbs not requiring conventional footrests. The center extension on this chair provides a mounting structure for custom- made leg supports.

5. Open structure of the chassis

. The area under the seat on a conventional chair is filled with cross tubing and support bars. This chair provides an open box that can carry personal or household items.

6. Red, wooden brake knobs

. Brake actuation is ergonomically designed, in a handy location and visible.

. Critics could say that the brake could be inadvertently bumped off. This would be readily apparent with the red knob down, which is more visible than conventional brakes that use a small, hidden lever.

Rotary Club of Burlington, Ontario. Canada.

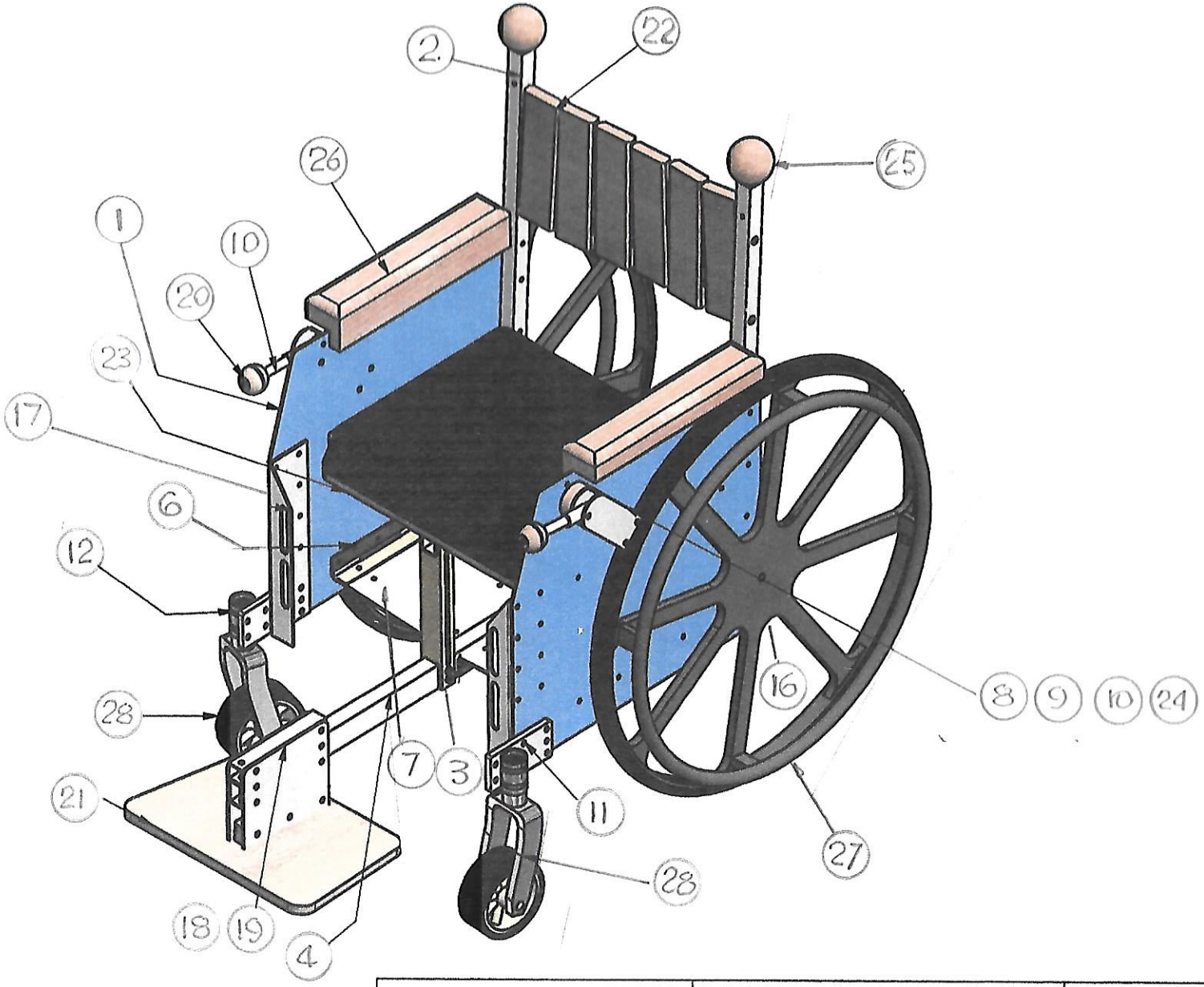

Date: Jan 11, 2017	By: F. Dyer	Drawing: S 300
Description: Wheelchair MK2 General Assembly		Sheet: 1 of 3

PARTS LIST

ITEM NO	DESCRIPTION	DRAWING NO.	QTY.
	METAL PARTS		
1	SIDE PLATE	S 103	2
2	HANDLE TUBE	S 104	2
3	CENTER FRAME VERTICAL	S 155	2
4	CENTER FRAME BOTTOM	S 156	1
5	CENTER FRAME TOP	S 157	1
6	HINGE	S 158	8
7	TOP AND BOTTOM LIFT PLATE, 18"	S 350	4
8	BRAKE BOX	S 174	2
9	BRAKE BLOCK	S 173	2
10	BRAKE HANDLE	S 175	2
11	CASTER PLATE	S 125	2
12	CASTER TUBE	S 377	2
13	STRUT, ROLLER BAR, 18"	S 306	4
14	ROLLER SLIDE BAR	S 378	1
15	ROLLER	S 379	8
16	AXLE SUPPORT INSERT	S 380	2
17	DOUBLING PLATE	S 602	2
18	FOOT REST TOP TUBE	S 603	1
19	FOOT REST VERTICAL PLATE	S 117	2

Date: Jan 11, 2017	By: F. Dyer	Drawing: S 300
Description: Wheelchair MK2 General Assembly		Sheet: 2 of 3

PARTS LIST

ITEM NO	DESCRIPTION	DRAWING NO.	QTY.
	WOOD PARTS		
20	BRAKE KNOB	S605	2
21	WOOD FOOT REST	S604	1
22	BACK REST SLAT	S369	6
23	SEAT BASE 18"	S362	1
24	BRAKE BOX SPACER	S177	2
25	BALL HANDLE	S170	2
26	ARM REST	S164	2
	WHEELS		
27	WHEEL	S171	2
28	CASTER	S172	2
	SUB ASSEMBLES		
-	TOP & BOTTOM PLATE AND HINGES	S505	-
-	CENTER FRAME	S507	-
-	BRAKE	S515	-
-	SIDE PLATE	S516	-
-	SLIDER	S517	-

Date: Jan 11, 2017	By: F. Dyer	Drawing: S 300
Description: Wheelchair MK2 General Assembly		Sheet: 3 of 3

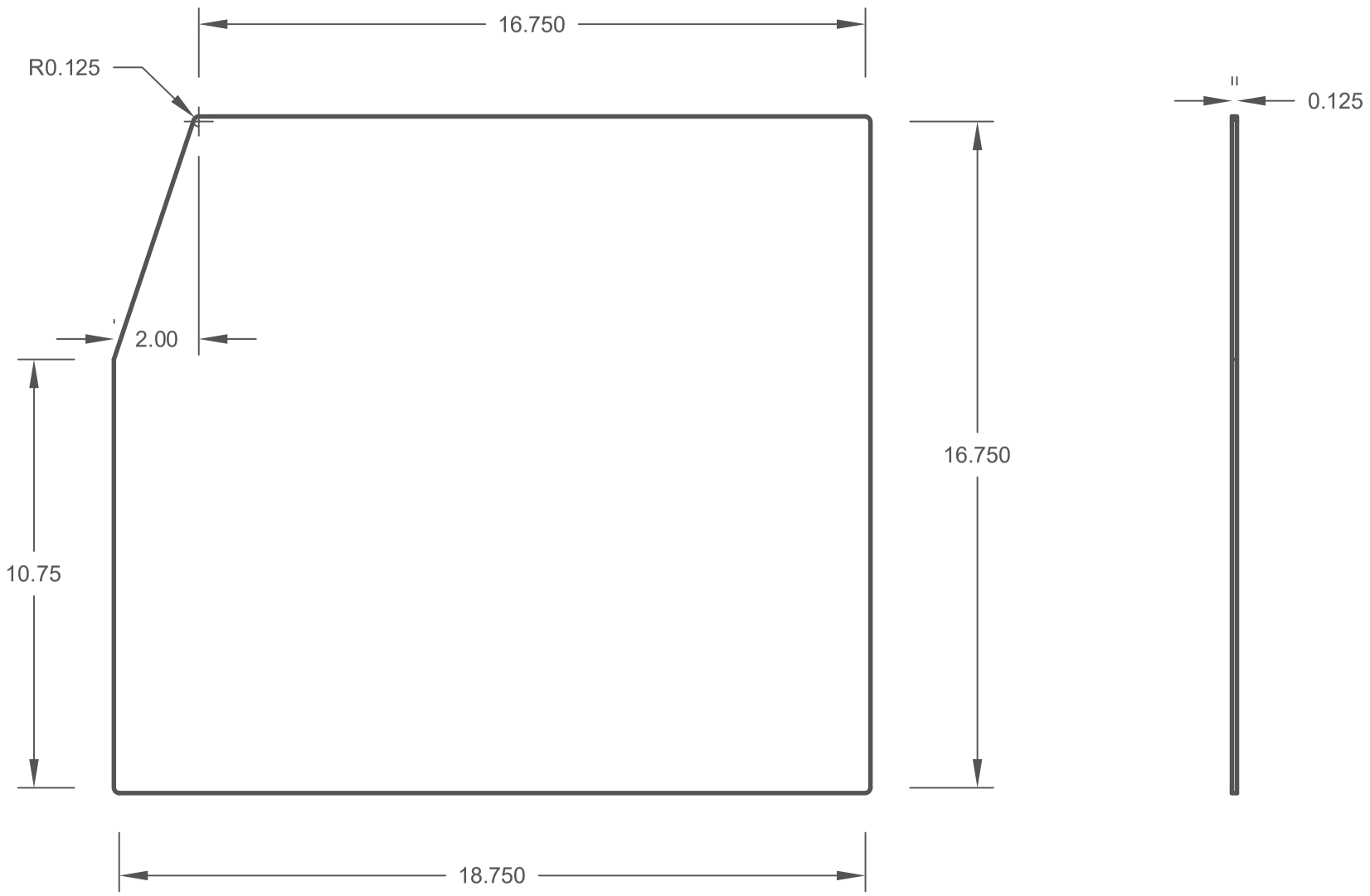

Material: Aluminum $\frac{1}{8}$"
Deburr and break all sharp edges
All dimension are in inches

Date: Jun-28-17	By: F. Dyer	Drawing: S 103
Description: **Side Plate**		Sheet: 1 of 2

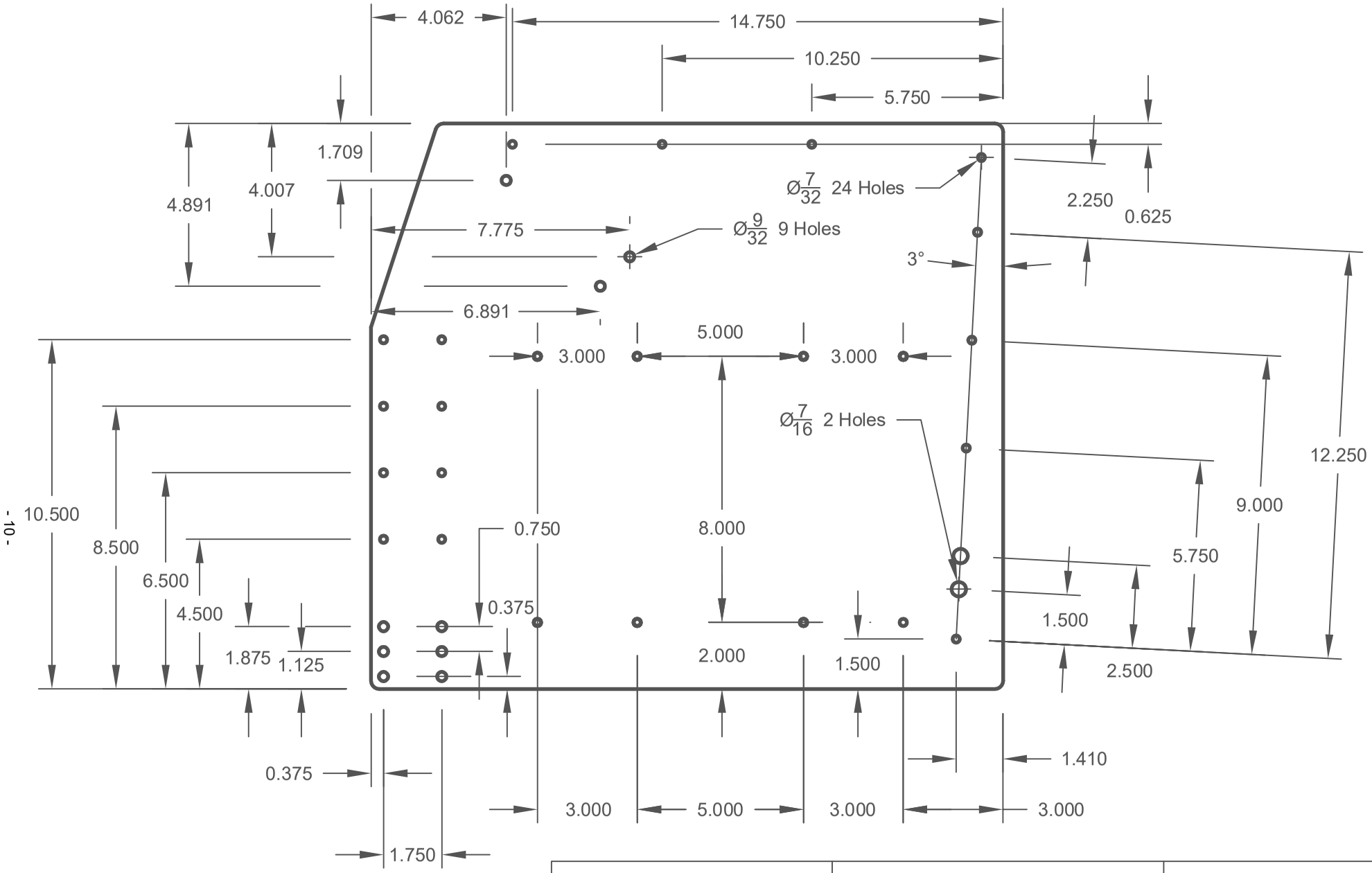

Material: Aluminum $\frac{1}{8}$"
Deburr and break all sharp edges
All dimension are in inches

Date: Jun-28-17	By: F. Dyer	Drawing: S 103
Description: **Side Plate**		Sheet: 2 of 2

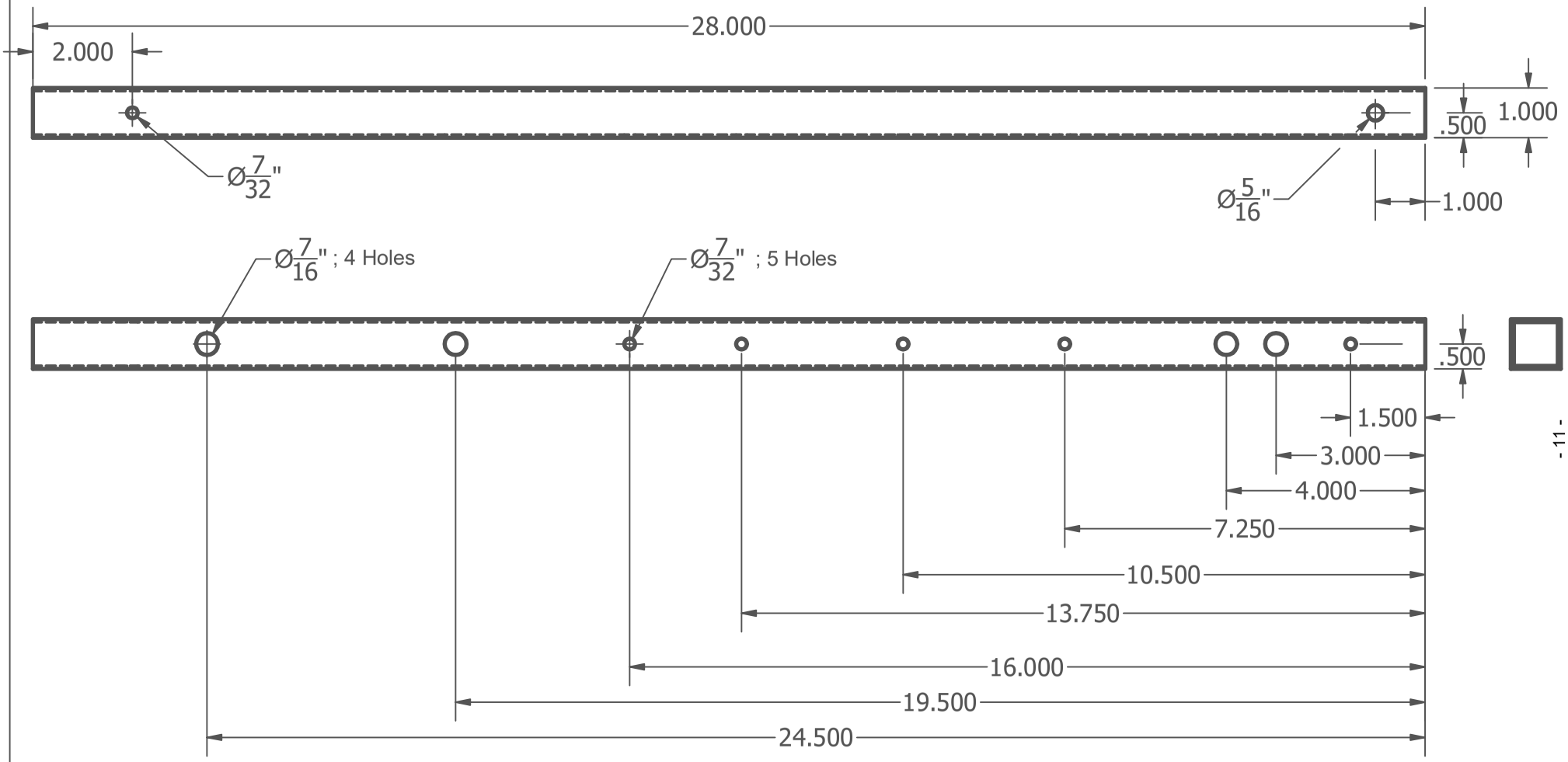

Material: Aluminum 1" x 1" x $\frac{1}{16}$"
Deburr and break all sharp edges
All dimension are in inches
All holes through

Date: Jun-28-17	By: F. Dyer	Drawing: S 104
Description: **Handle Tube**		Sheet: 1 of 1

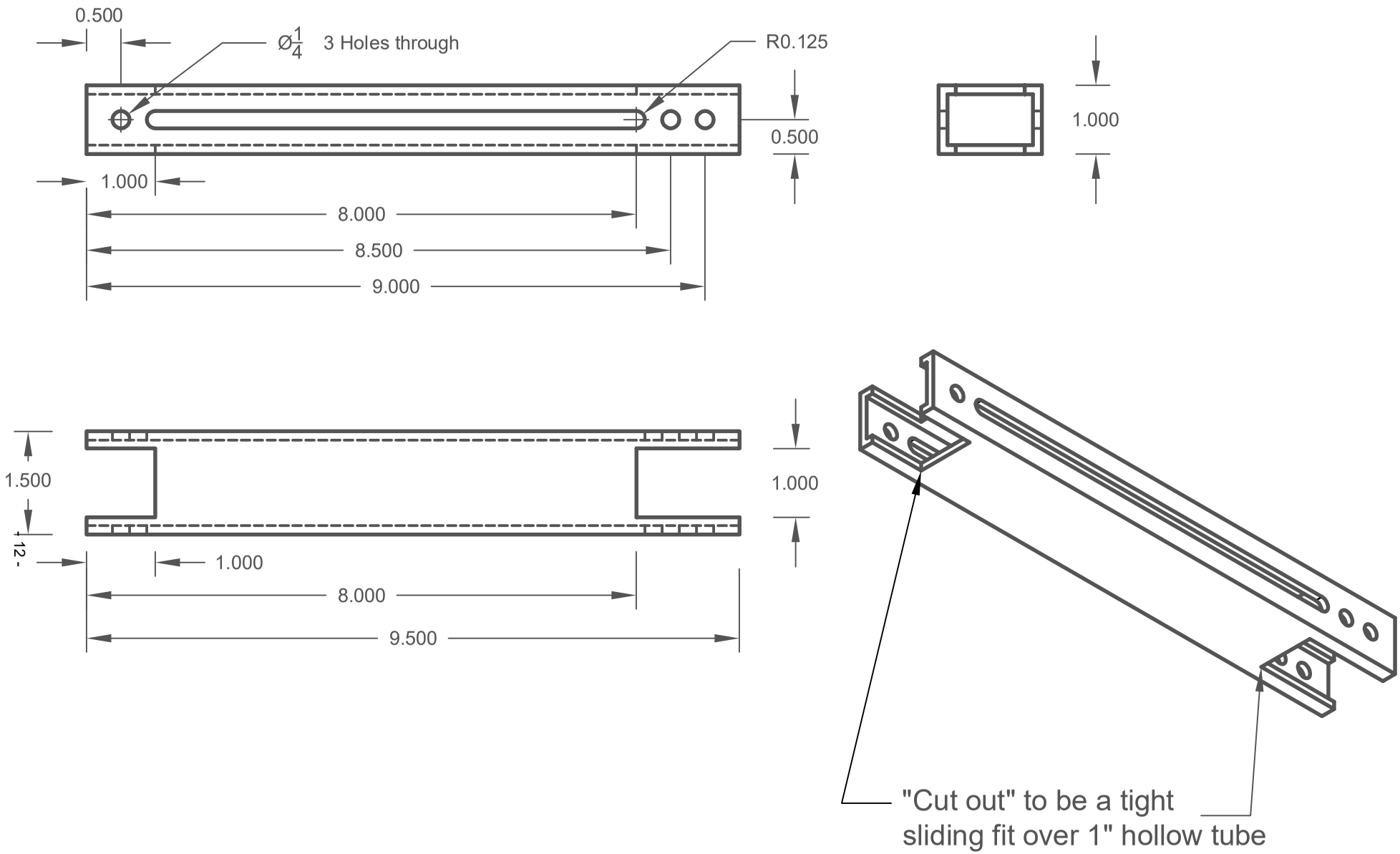

Material: Aluminum 1" x 1 $\frac{1}{2}$" x $\frac{1}{8}$" wall
Deburr and break all sharp edges
All dimension are in inches

Date: Jun-28-17	By: F. Dyer	Drawing: S 155
Description: **Center Frame Vertical**		Sheet: 1 of 1

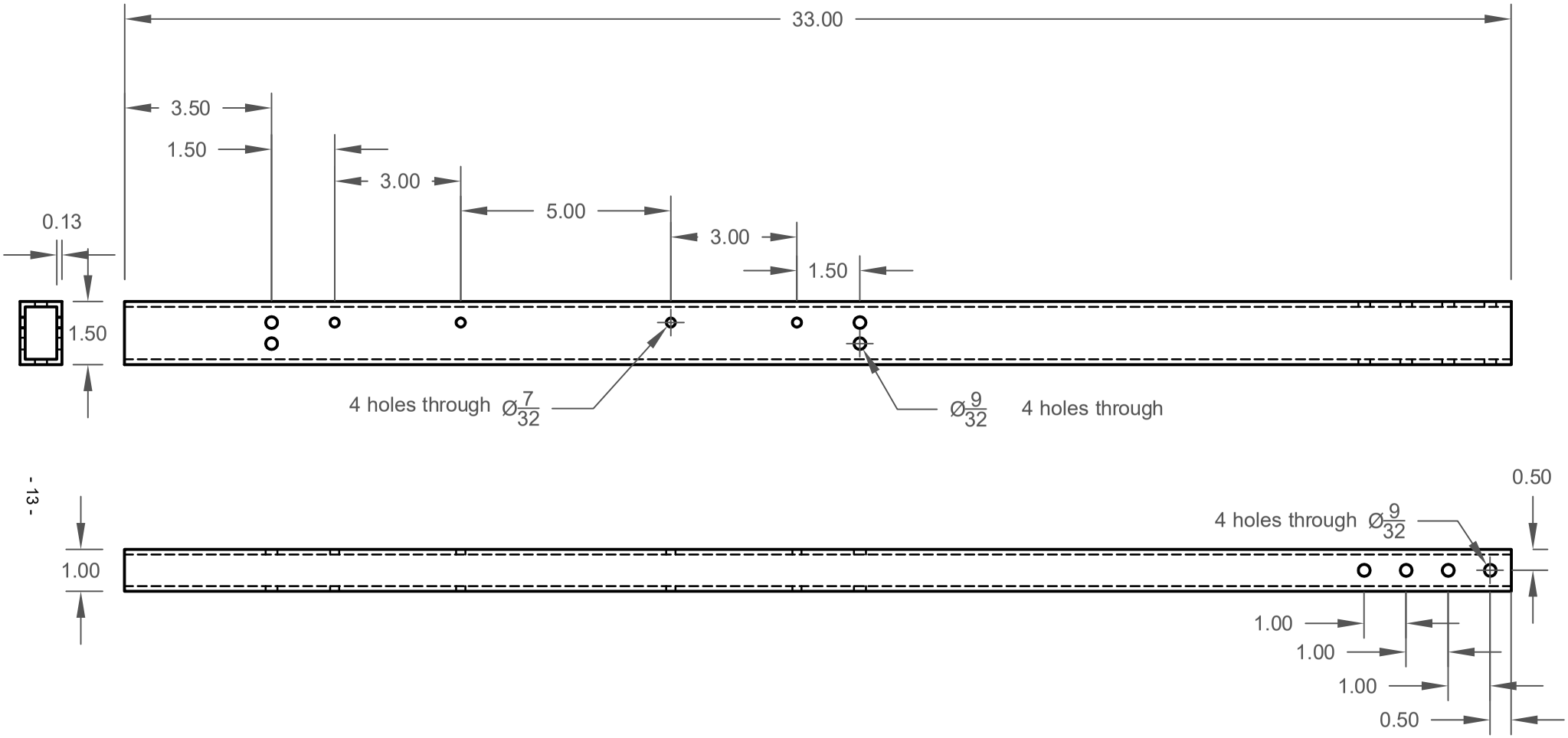

Material: Aluminum 1" x 1.5" x 0.125"
Deburr and break all sharp edges
All dimension are in inches

Date: Jun-28-17	By: F. Dyer	Drawing: S 156
Description: **Center Frame Bottom**		Sheet: 1 of 1

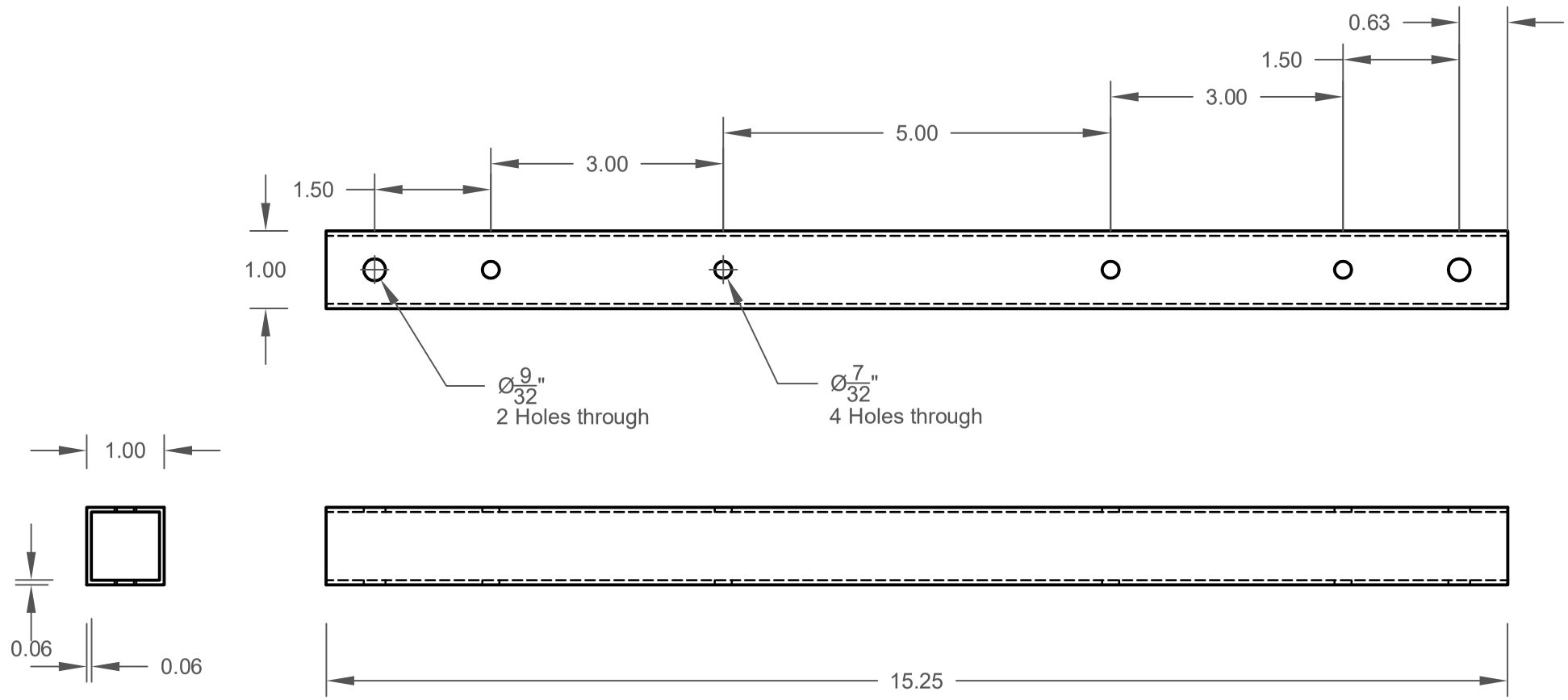

Material: Aluminum 1" x 1" x $\frac{1}{16}$" wall
Deburr and break all sharp edges
All dimension are in inches

Date: Jun-28-17	By: F. Dyer	Drawing: S 157
Description: **Center Frame Top**		Sheet: 1 of 1

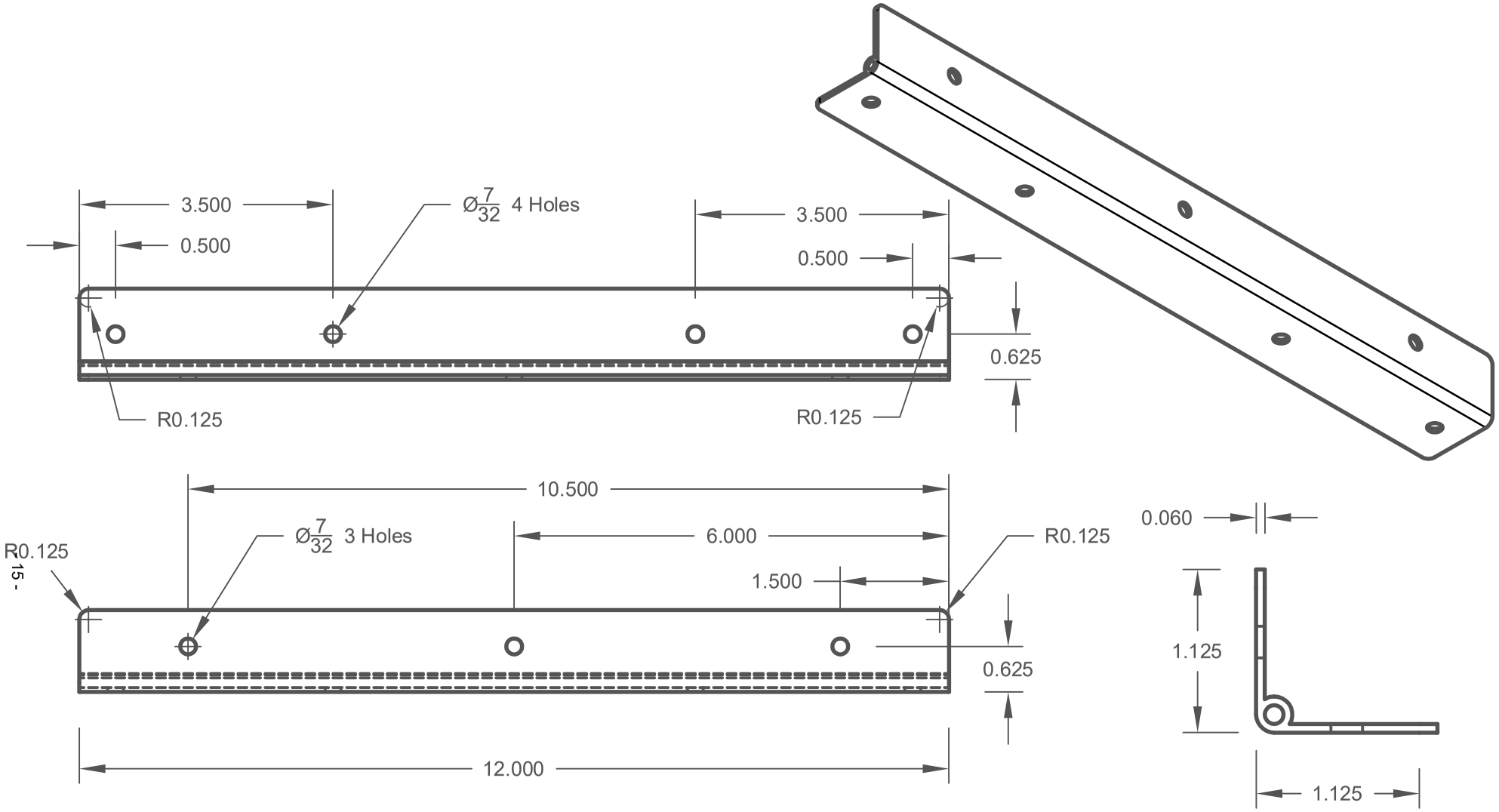

Material: 2" x 0.06" x $\frac{1}{8}$". Continuous hinge, steel, paint grey
Deburr and break all sharp edges
All dimension are in inches

Date: Jun-28-17	By: F. Dyer	Drawing: S 158
Description: **Hinge**		Sheet: 1 of 1

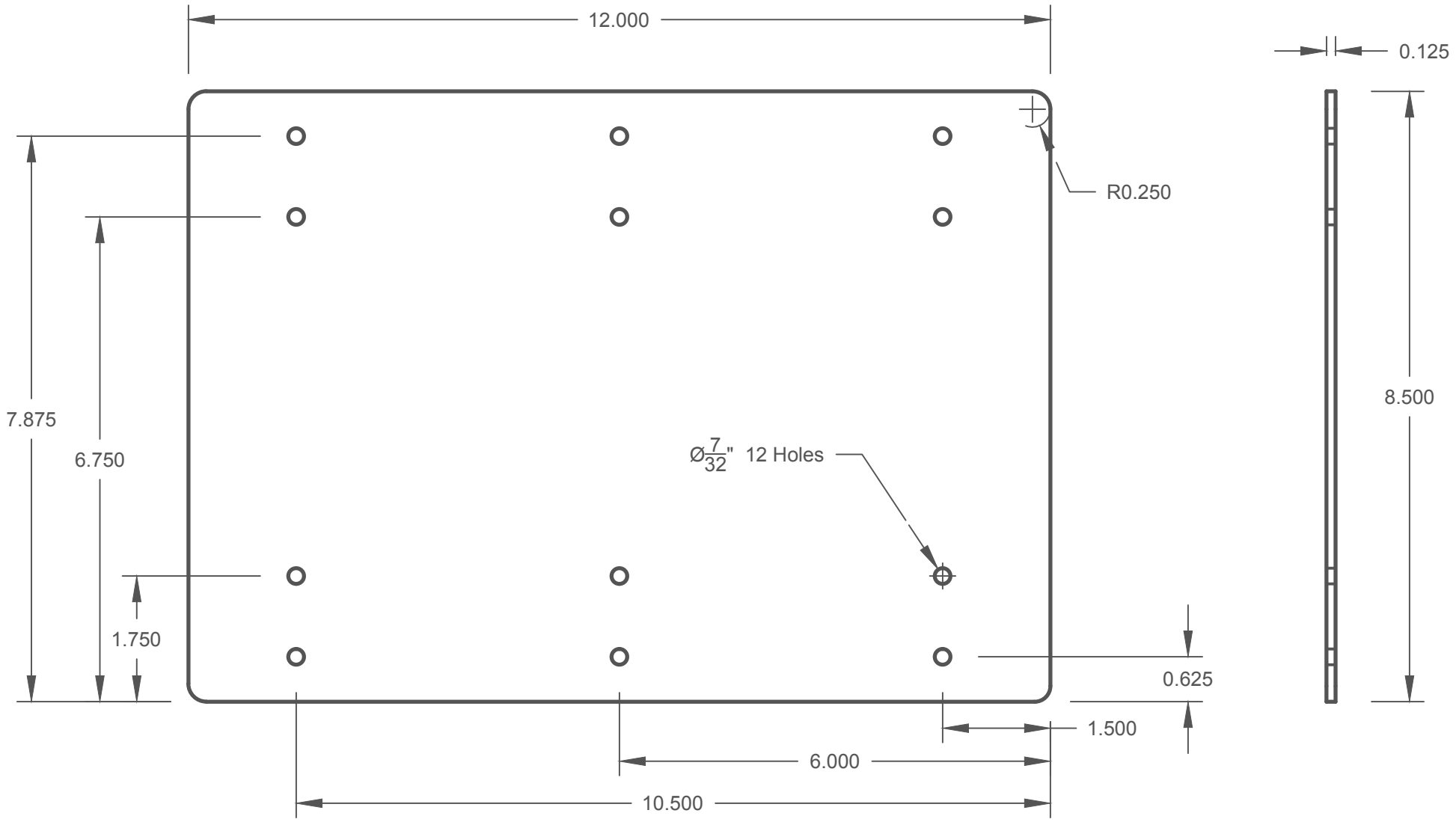

Material: Aluminum 1/8"
Deburr and break all sharp edges
All dimension are in inches

Date: Jun-28-17	By: F. Dyer	Drawing: S 350
Description: **Top and Bottom Lift Plate 18" Chair**		Sheet: 1 of 1

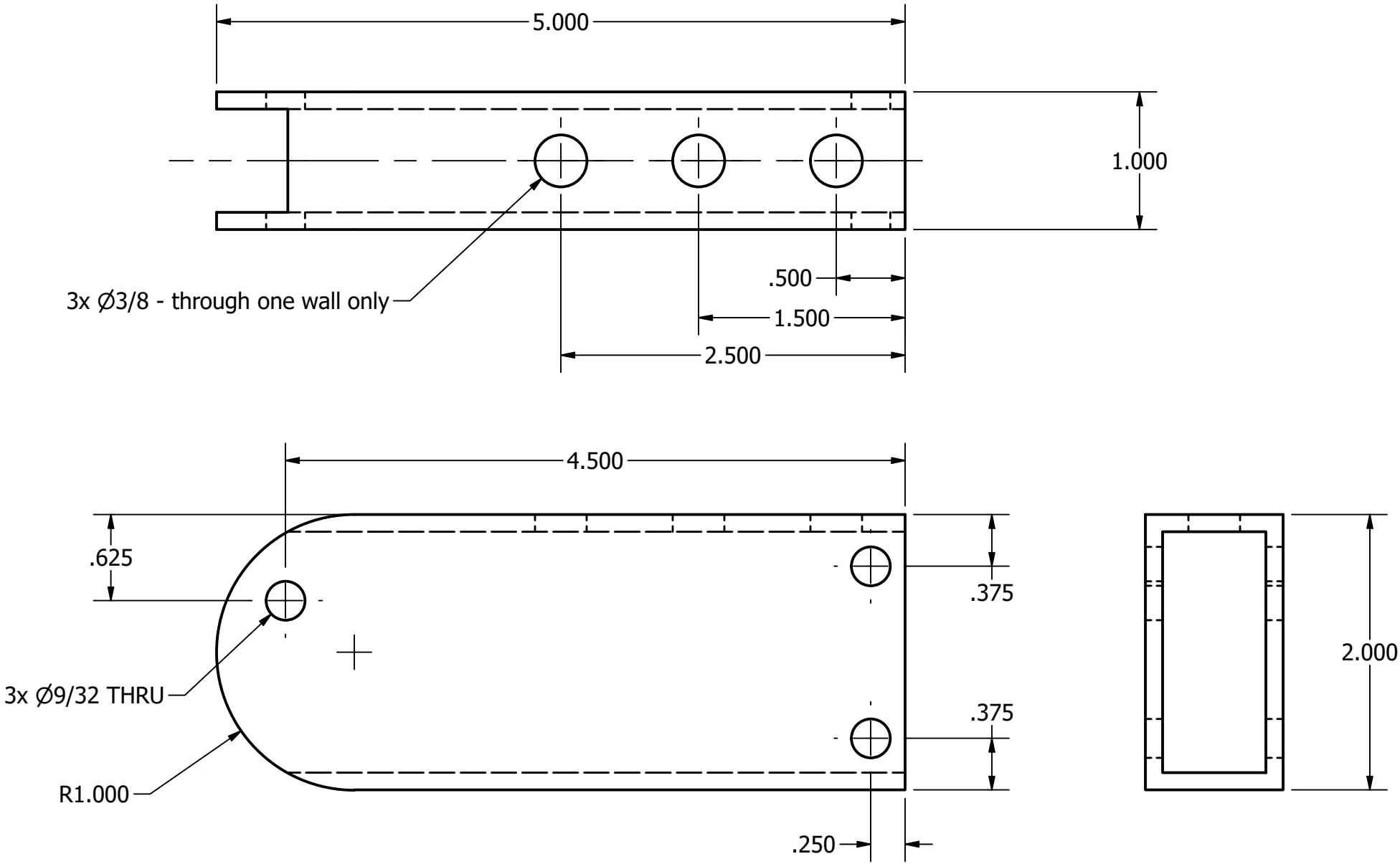

Material: Aluminum 1" x 2" x $\frac{1}{8}$"
Deburr and break all sharp edges and corners
$\frac{3}{8}$" 3 Holes through one side only
All dimension are in inches

Date: 5/24/2018	By: M.Rivellino	Drawing: S 174
Description: **Brake Box**		Sheet: 1 OF 1

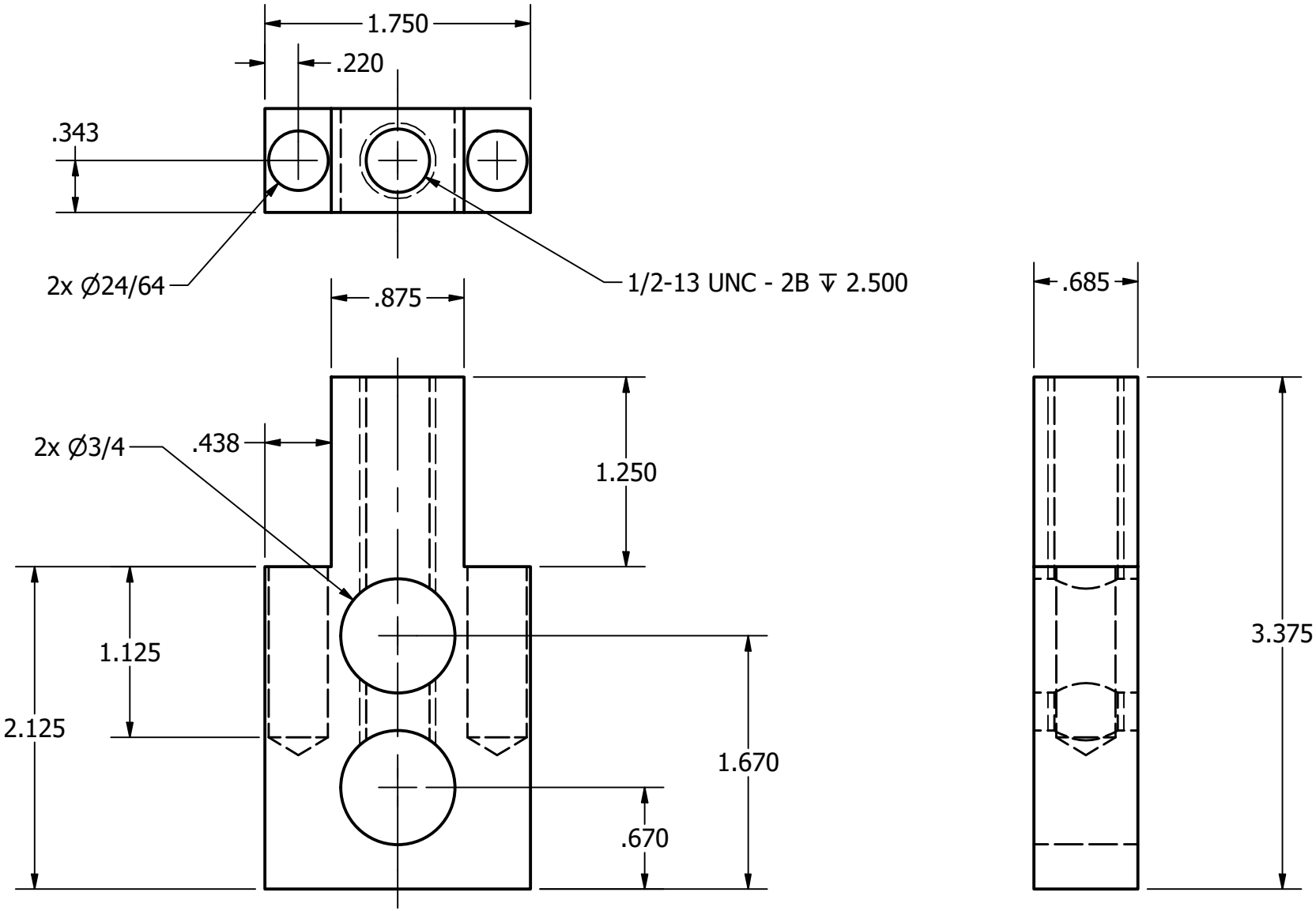

Material: Aluminum, UHMW Polyethylene, or High Density Polyethylene. $\frac{11}{16}$ x 1 $\frac{3}{4}$ x 3 $\frac{3}{8}$
Deburr and break all sharp edges and corners

Date: 5/17/2018	By: M.Rivellino	Drawing: S 173
Description: **Brake Block**		Sheet: 1 OF 1

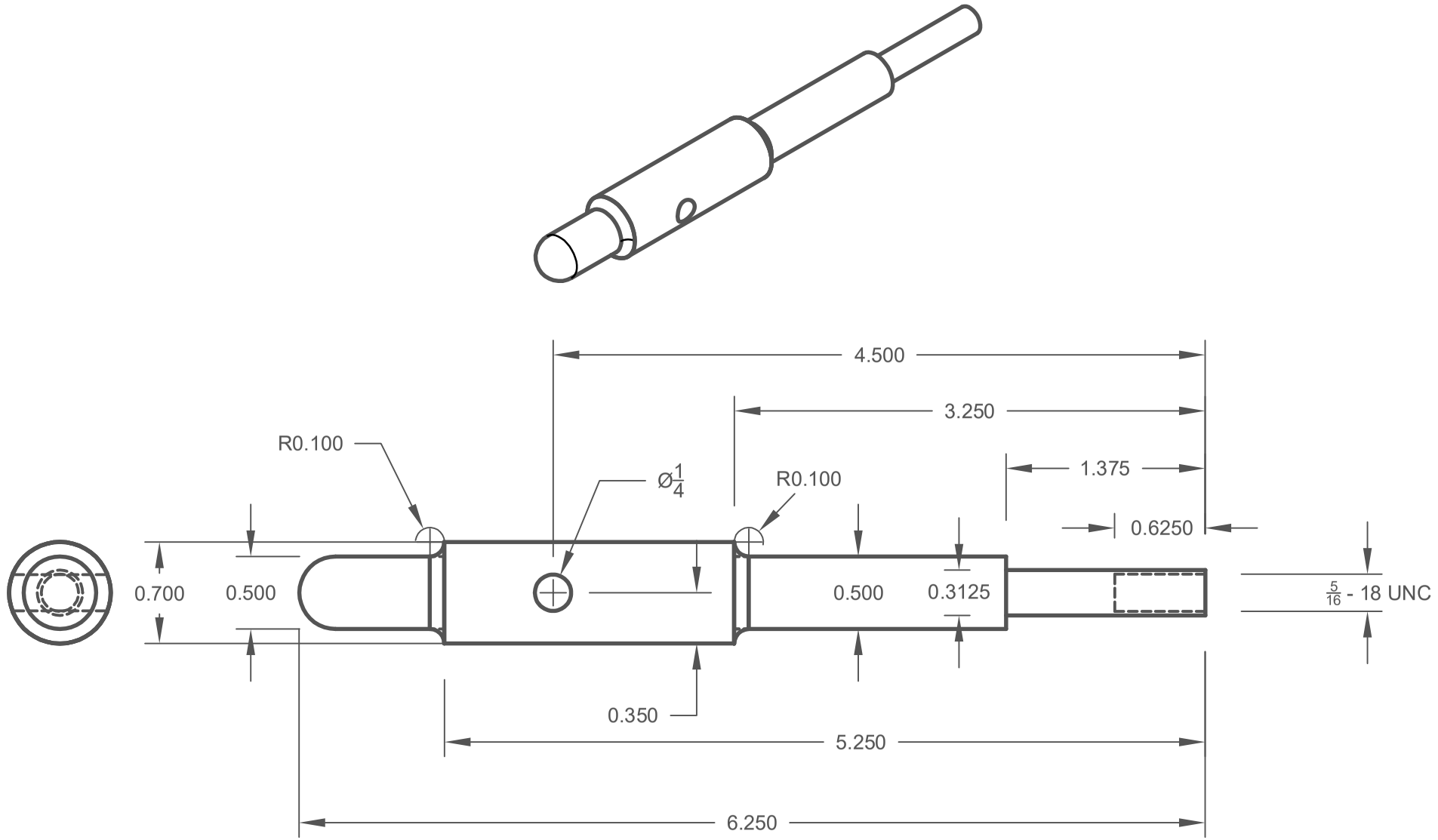

Material: Aluminum round bar $\frac{3}{4}$" x 6 $\frac{1}{4}$"
Deburr and break all sharp edges
All dimension are in inches

Date: Jun-28-17	By: F. Dyer	Drawing: S 175
Description: **Brake Handle**		Sheet: 1 of 1

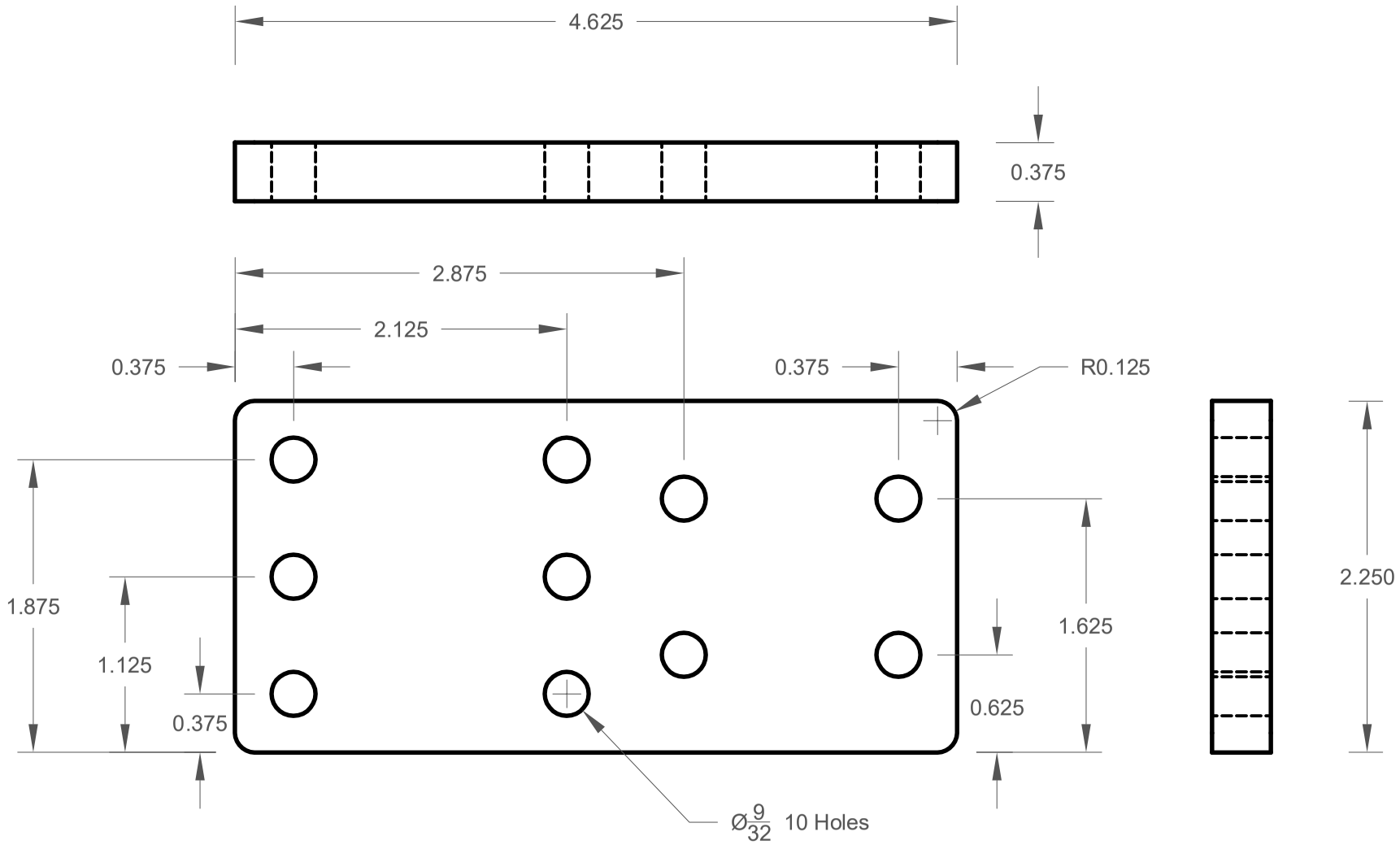

Material: Aluminum. $\frac{3}{8}$
Deburr and break all sharp edges
All dimension are in inches

Date: Jun-28-17	By: F. Dyer	Drawing: S 125
Description: **Caster Plate**		Sheet: 1 of 1

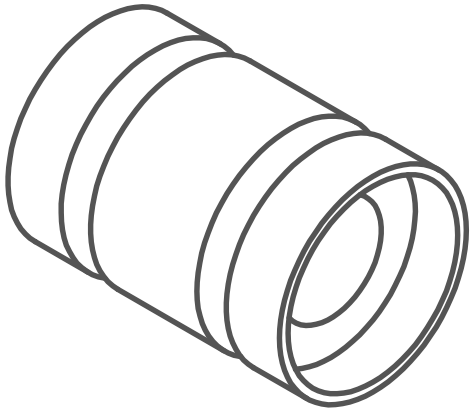

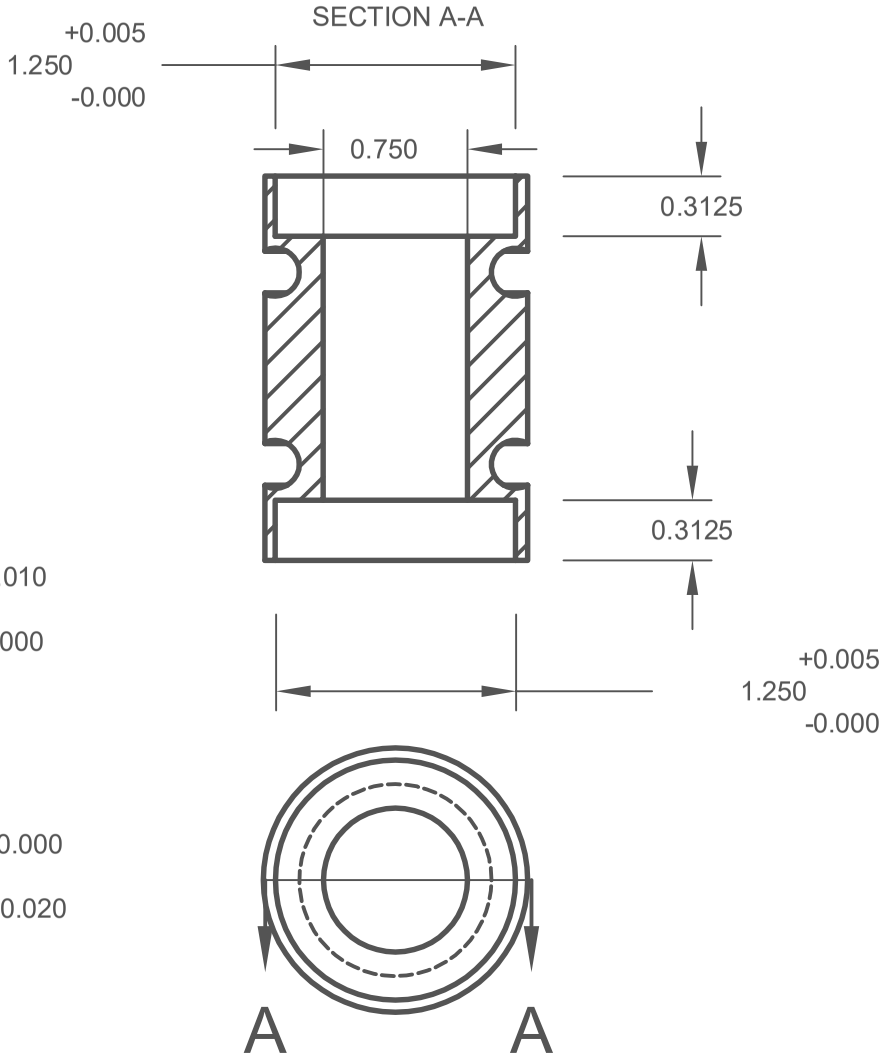

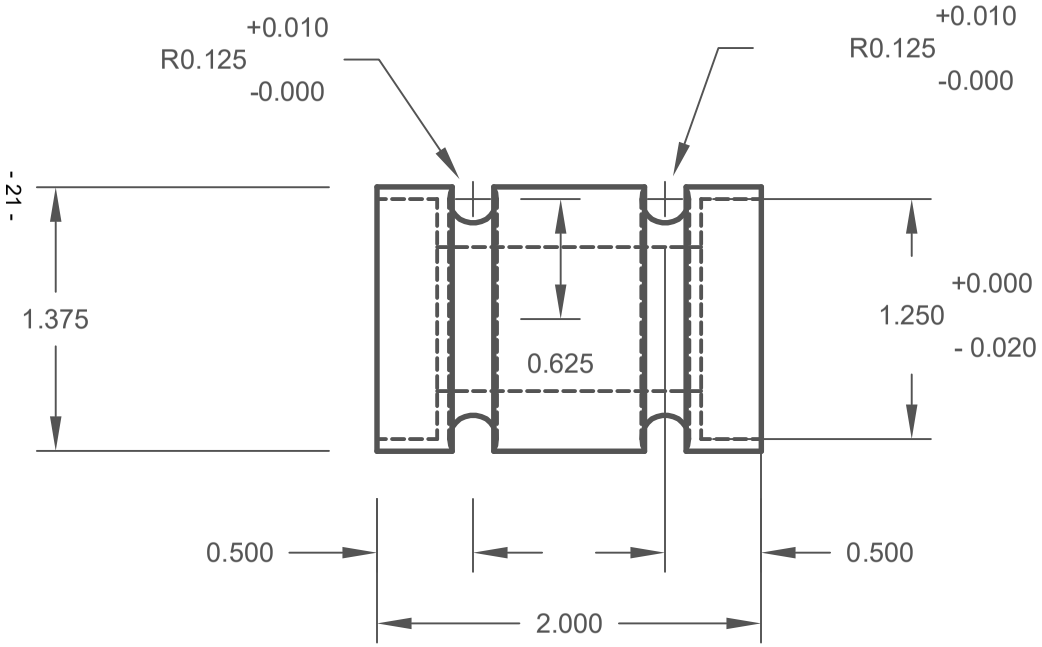

Material: Aluminum 1 $\frac{3}{8}$"
Deburr and break all sharp edges
All dimension are in inches

Date: Jun-28-17	By: F. Dyer	Drawing: S 377
Description: **Caster Tube**		Sheet: 1 of 1

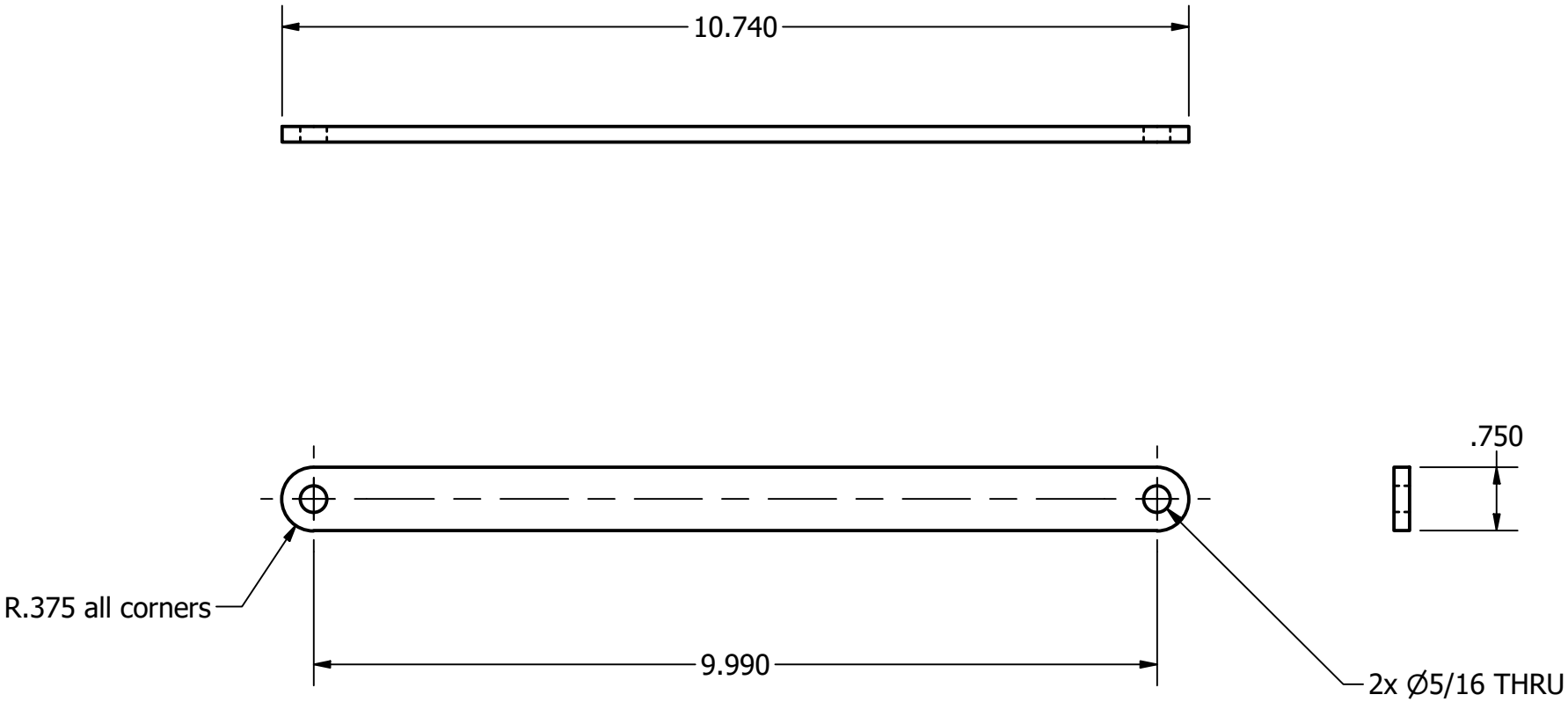

Material: Aluminum $\frac{3}{16}$"
Deburr and break all sharp edges and corners
All dimensions are in inches

Date: 5/24/2018	By: M.Rivellino	Drawing: S 306
Description: **Strut, Roller Bar, 18-inch Chair**		Sheet: 1 OF 1

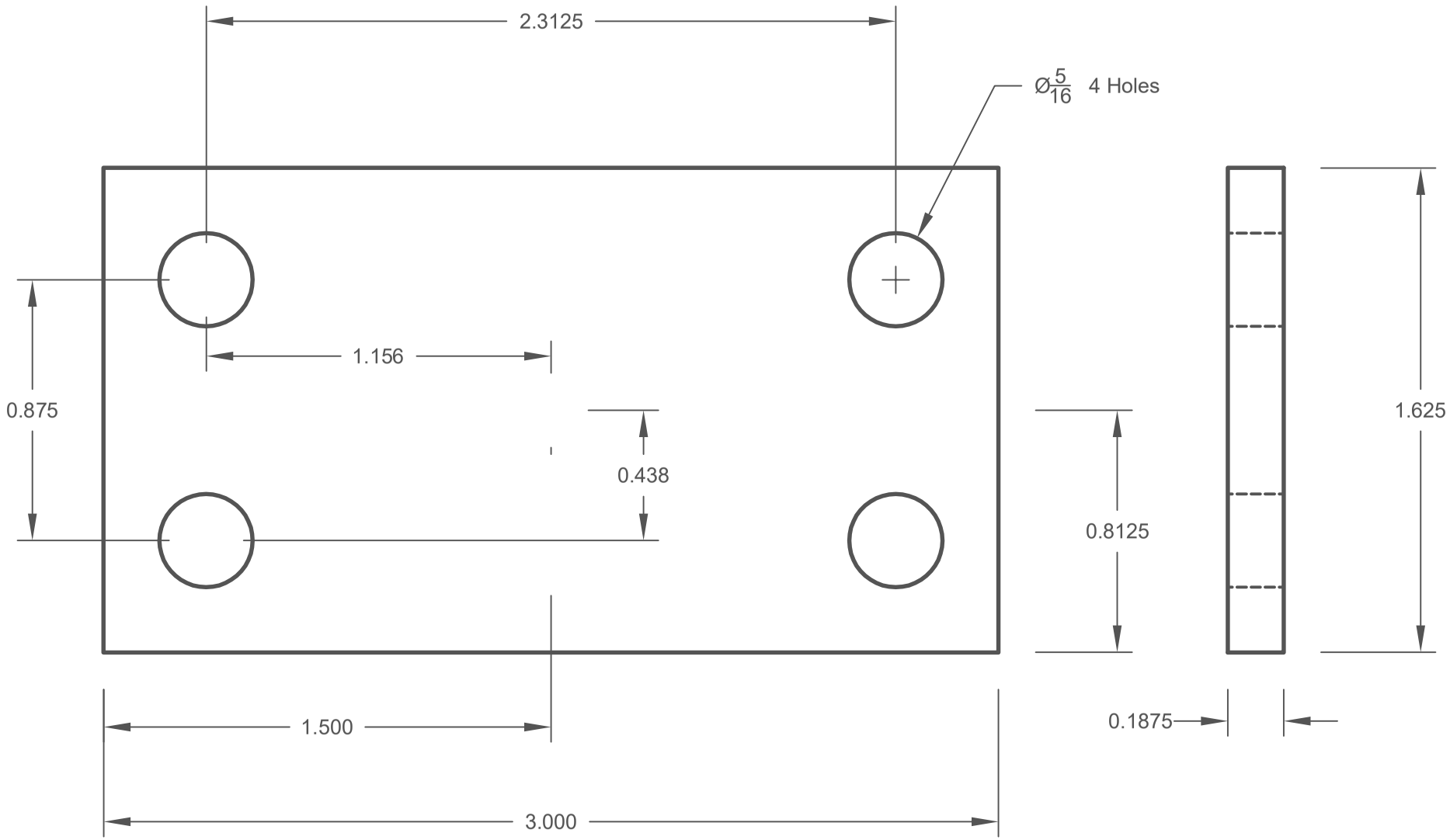

Material: Aluminum $\frac{3}{16}$" x 1 $\frac{5}{8}$"
Deburr and break all sharp edges
All dimension are in inches

Date: Jun-28-17	By: F. Dyer	Drawing: S 378
Description: **Roller Slide Bar**		Sheet: 1 of 1

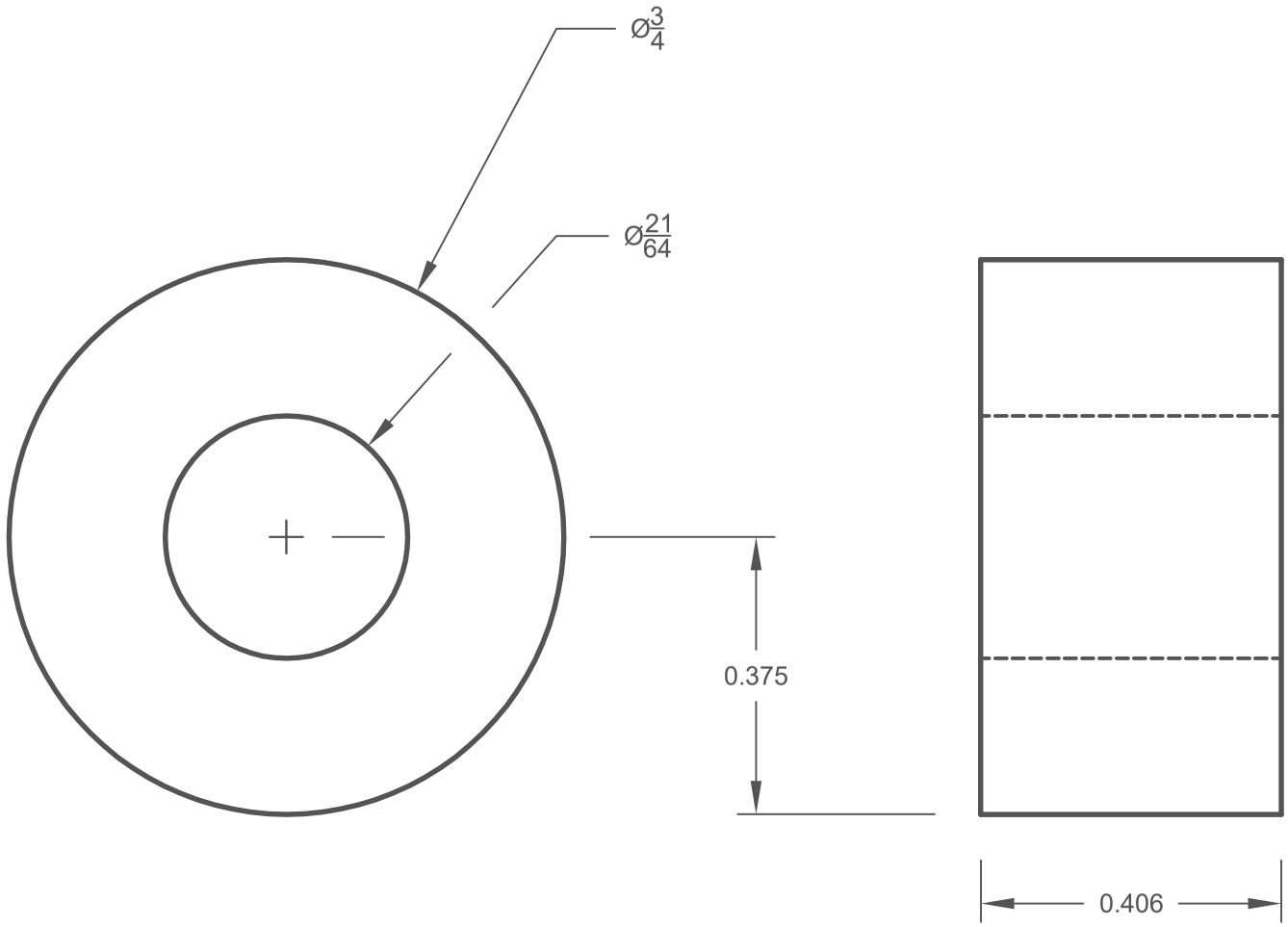

Material: Aluminum, Brass, or UHMW-PE
Deburr and break all sharp edges
All dimension are in inches

Date: Jun-28-17	By: F. Dyer	Drawing: S 379
Description: **Roller**		Sheet: 1 of 1

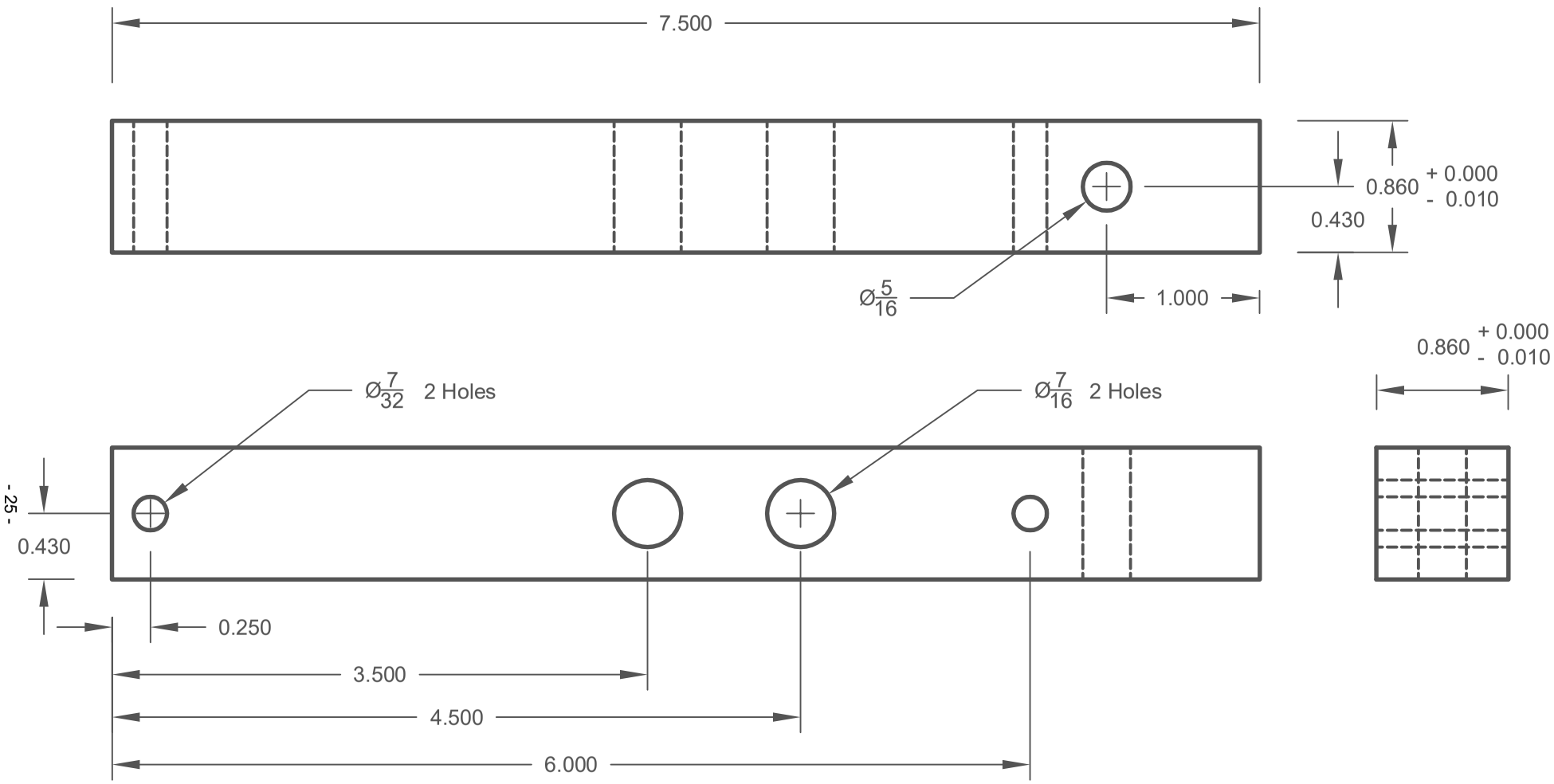

Material: Aluminum $\frac{7}{8}$" x $\frac{7}{8}$" x 7 $\frac{1}{2}$"
Deburr and break all sharp edges
All dimension are in inches

Date: Jun-28-17	By: F. Dyer	Drawing: S 380
Description: **Axle Support Insert**		Sheet: 1 of 1

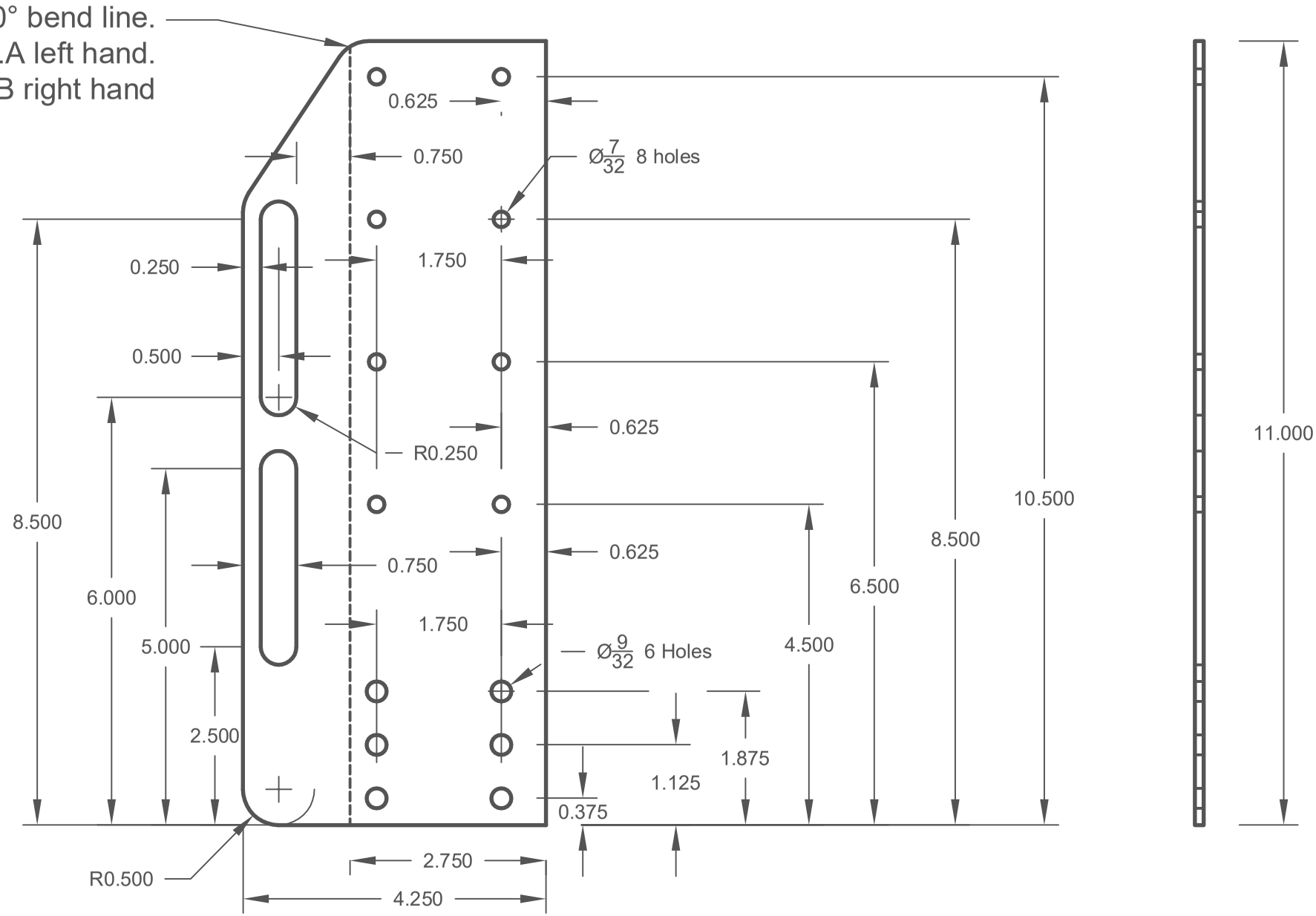

Material: Aluminum $\frac{1}{8}$"
Deburr and break all sharp edges
All dimension are in inches

Date: Jun-28-17	By: F. Dyer	Drawing: S 602
Description: **Doubling Plate**		Sheet: 1 of 1

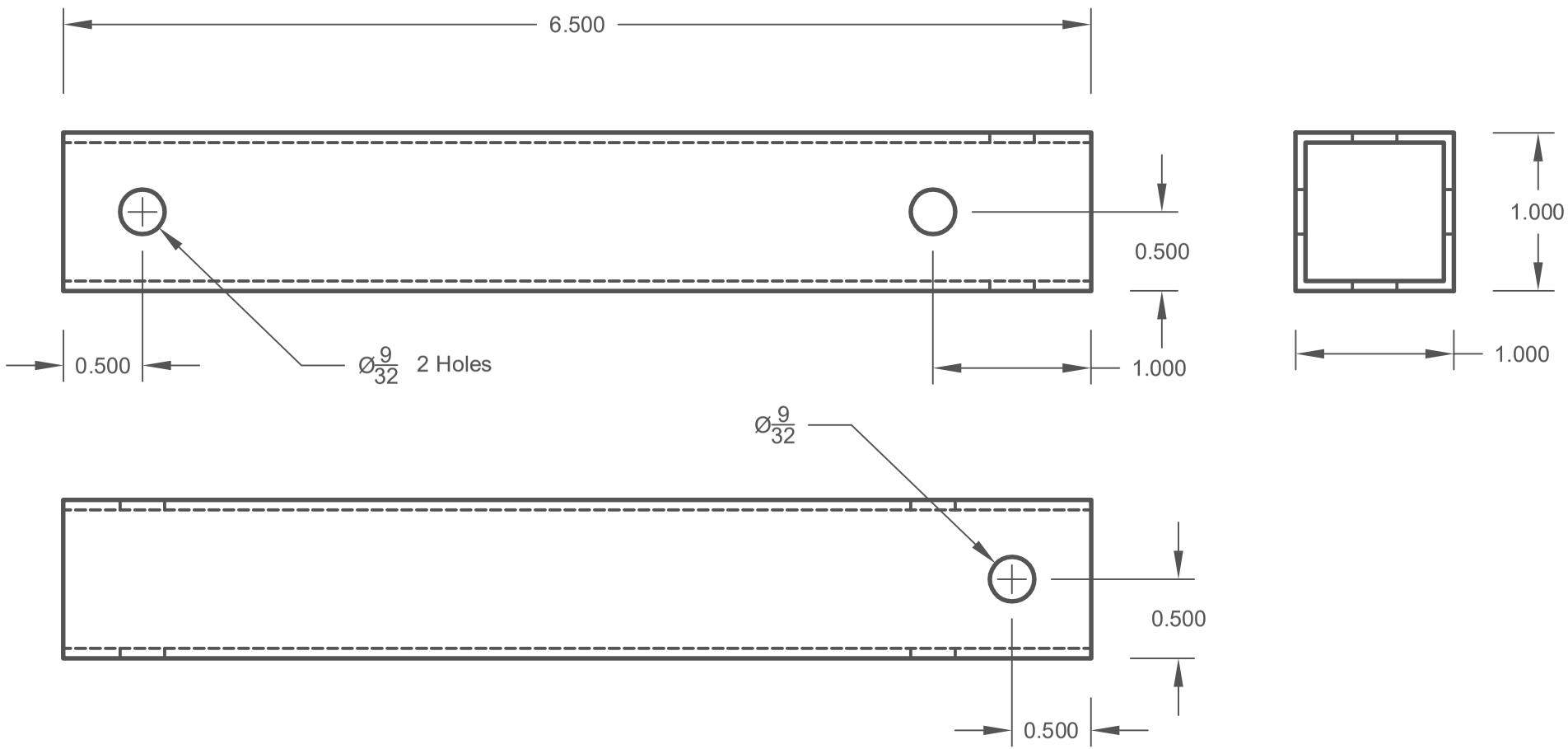

Material: Aluminum 1" x 1' x $\frac{1}{16}$"
Deburr and break all sharp edges
All dimension are in inches

Date: Jun-28-17	By: F. Dyer	Drawing: S 603
Description: **Foot Rest Top Tube**		Sheet: 1 of 1

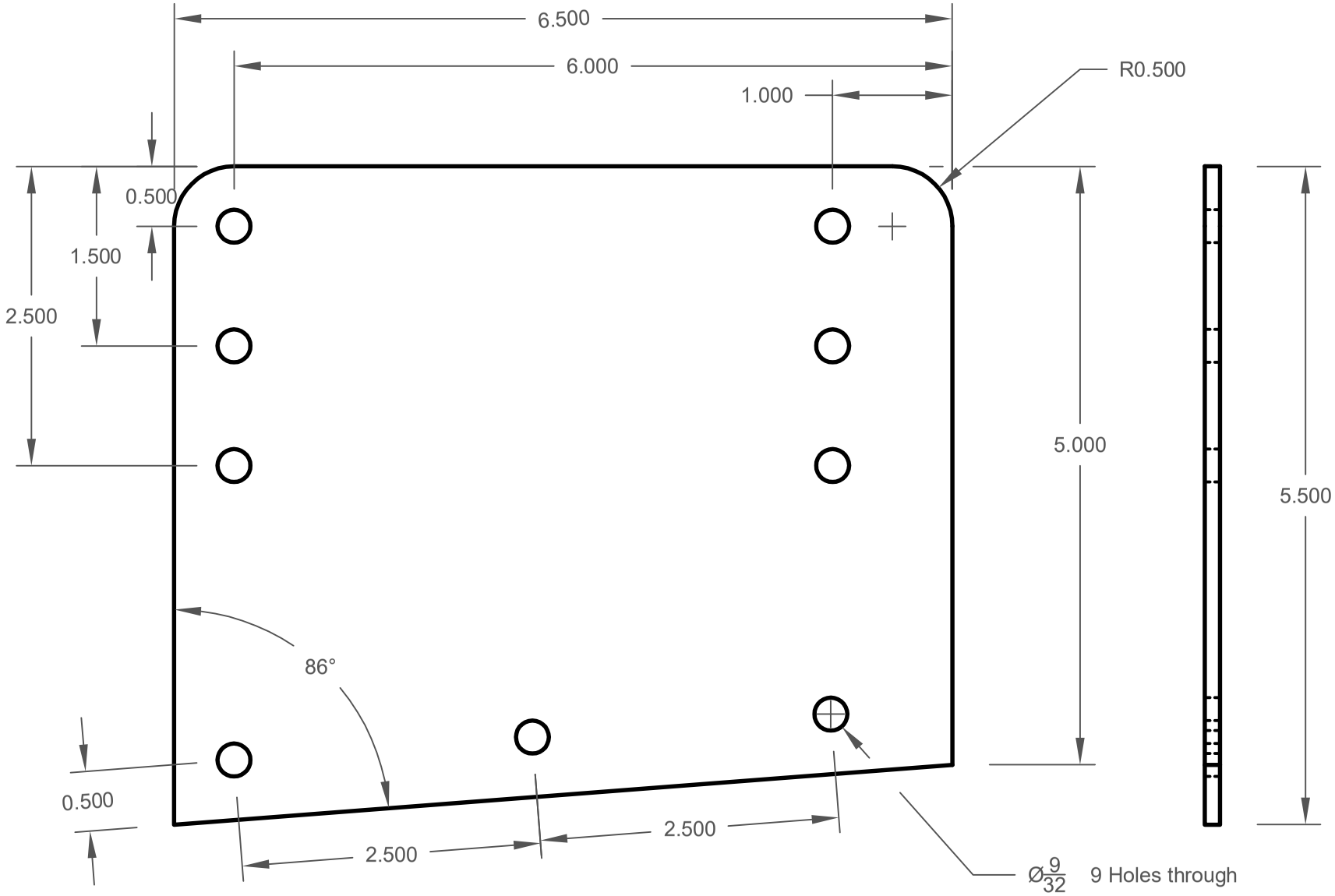

Material: Aluminum 1/8"
Deburr and break all sharp edges
All dimension are in inches

Date: Jun-28-17	By: F. Dyer	Drawing: S 117
Description: **Foot Rest Vertical Plate**		Sheet: 1 of 1

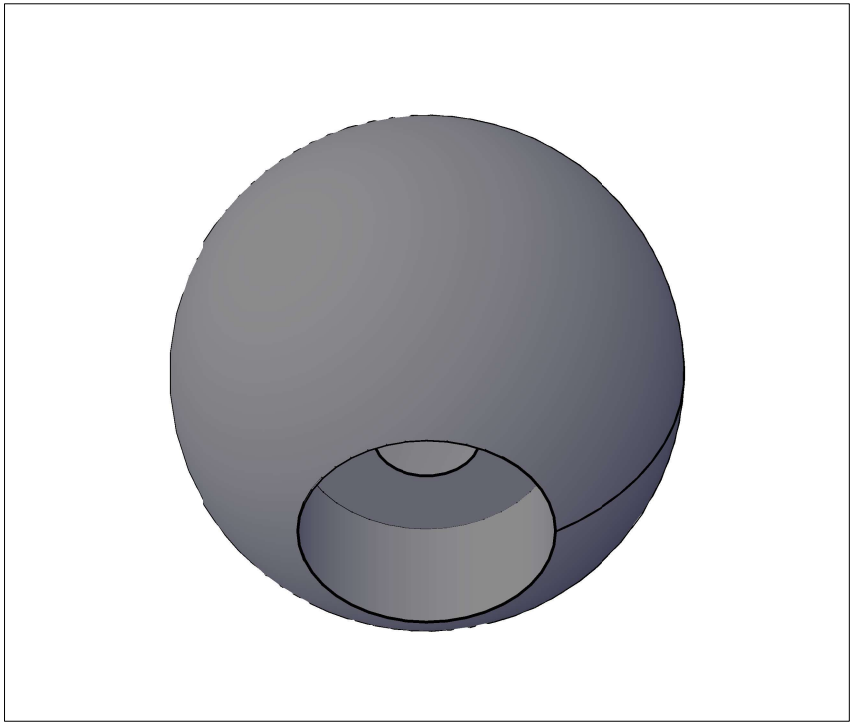

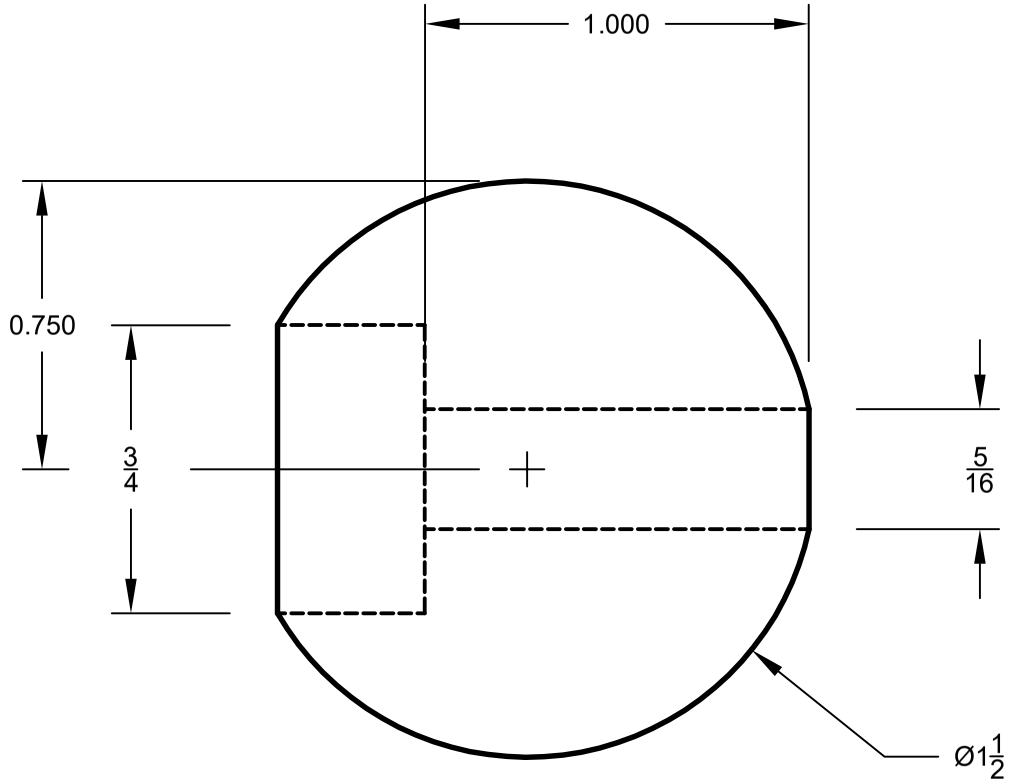

Material: 1 1/2-inch dia. Hardwood ball,
Paint red

Date: Jun-28-17	By: F. Dyer	Drawing: S 605
Description: **Brake Knob**		Sheet: 1 of 1

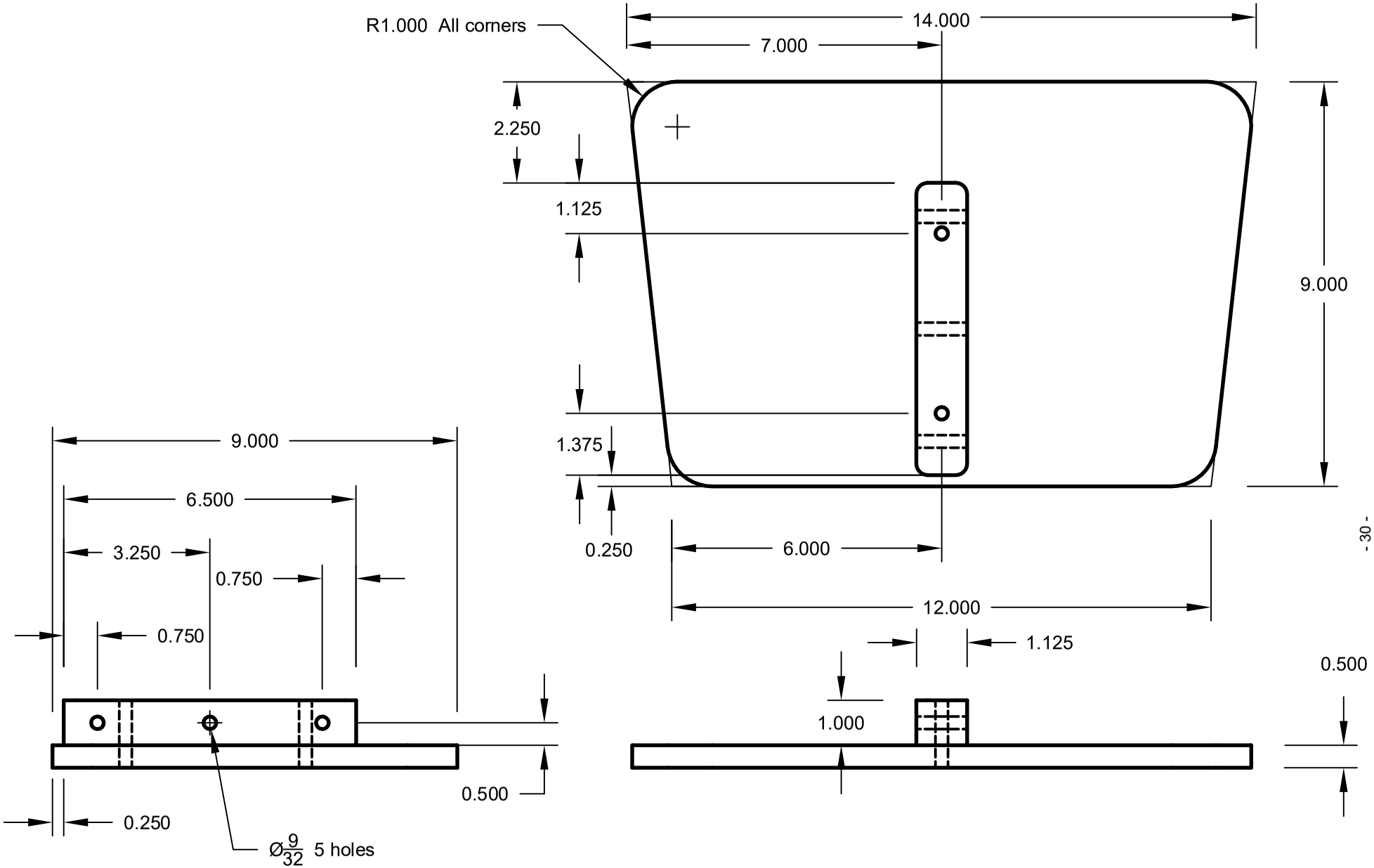

Material: Hardwood and Plywood $\frac{1}{2}$.
Urethane
Assemble with ¼ inch bolts and glue

Date: Jun-28-17	By: F. Dyer	Drawing: S 604
Description: **Wooden Foot Rest**		Sheet: 1 of 1

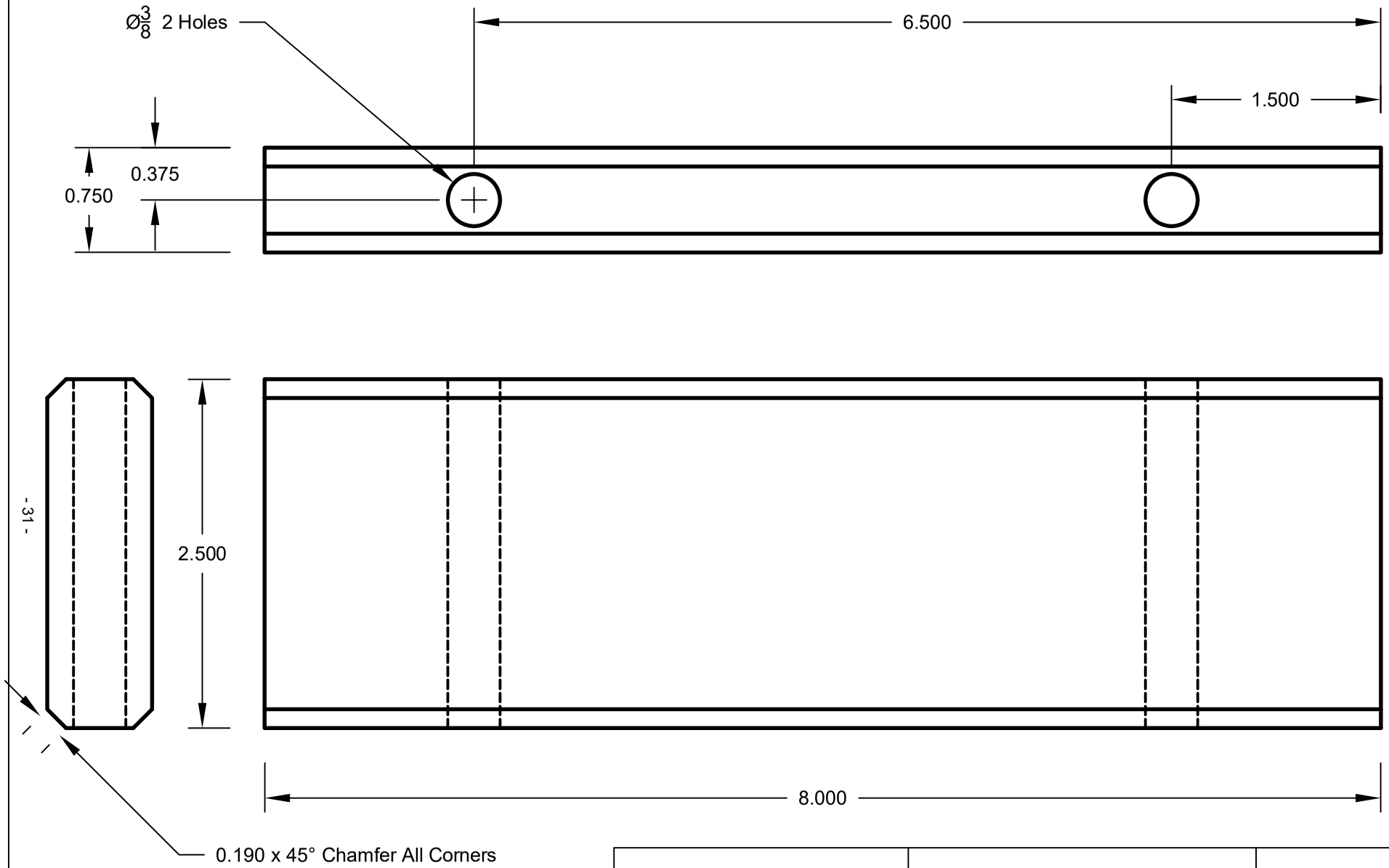

Material: Hardwood
Sand all edges

Date: Jun-28-17	By: F. Dyer	Drawing: S 369
Description: **Backrest, Wooden Slat**		Sheet: 1 of 1

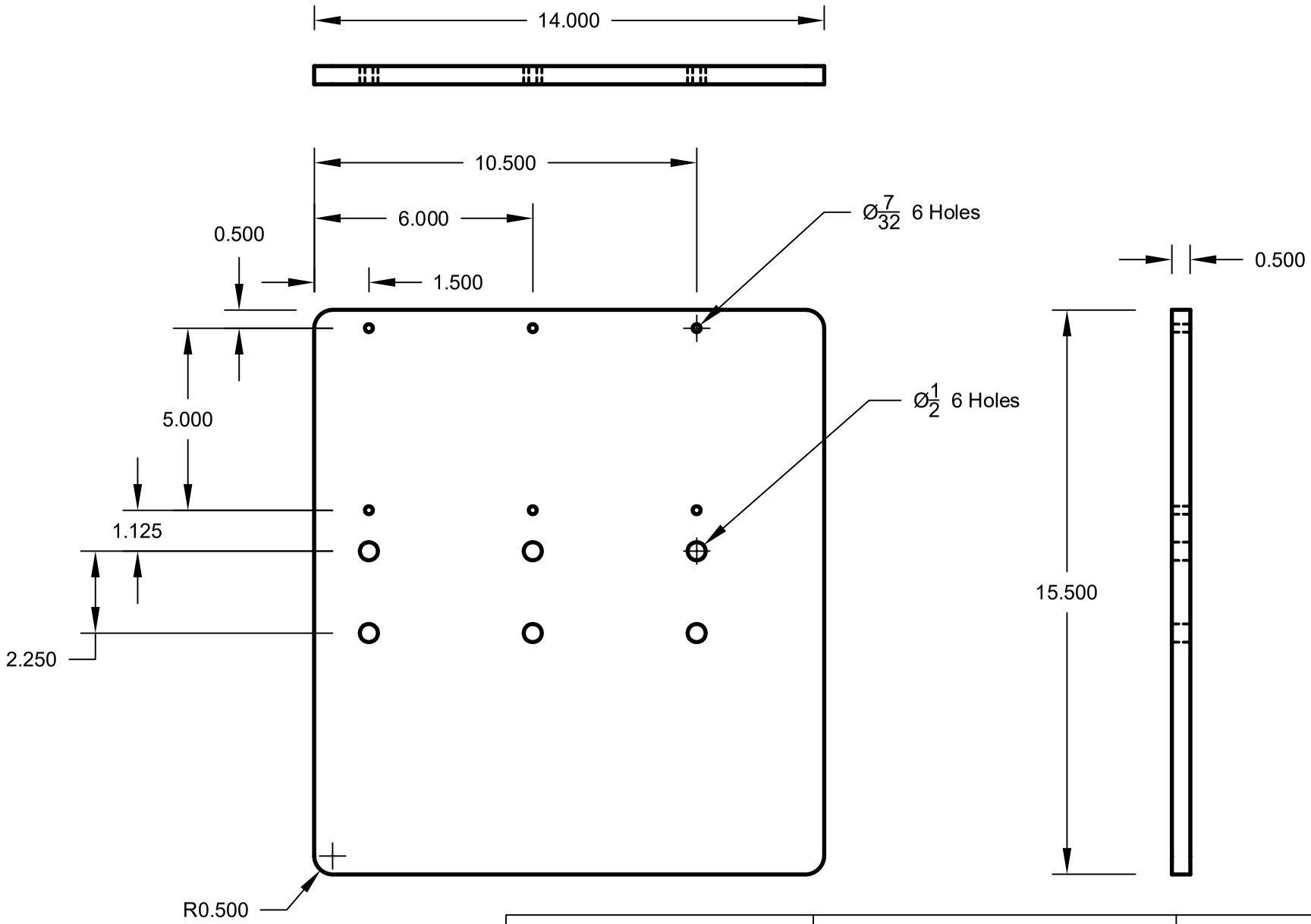

Material: Plywood $\frac{1}{2}$ thickness
Hardwood face both sides
Urethane
Sand all edges smooth

Date: Jun-28-17	By: F. Dyer	Drawing: S 362
Description: **Wooden Seat Base 18-inch Chair**		Sheet: 1 of 1

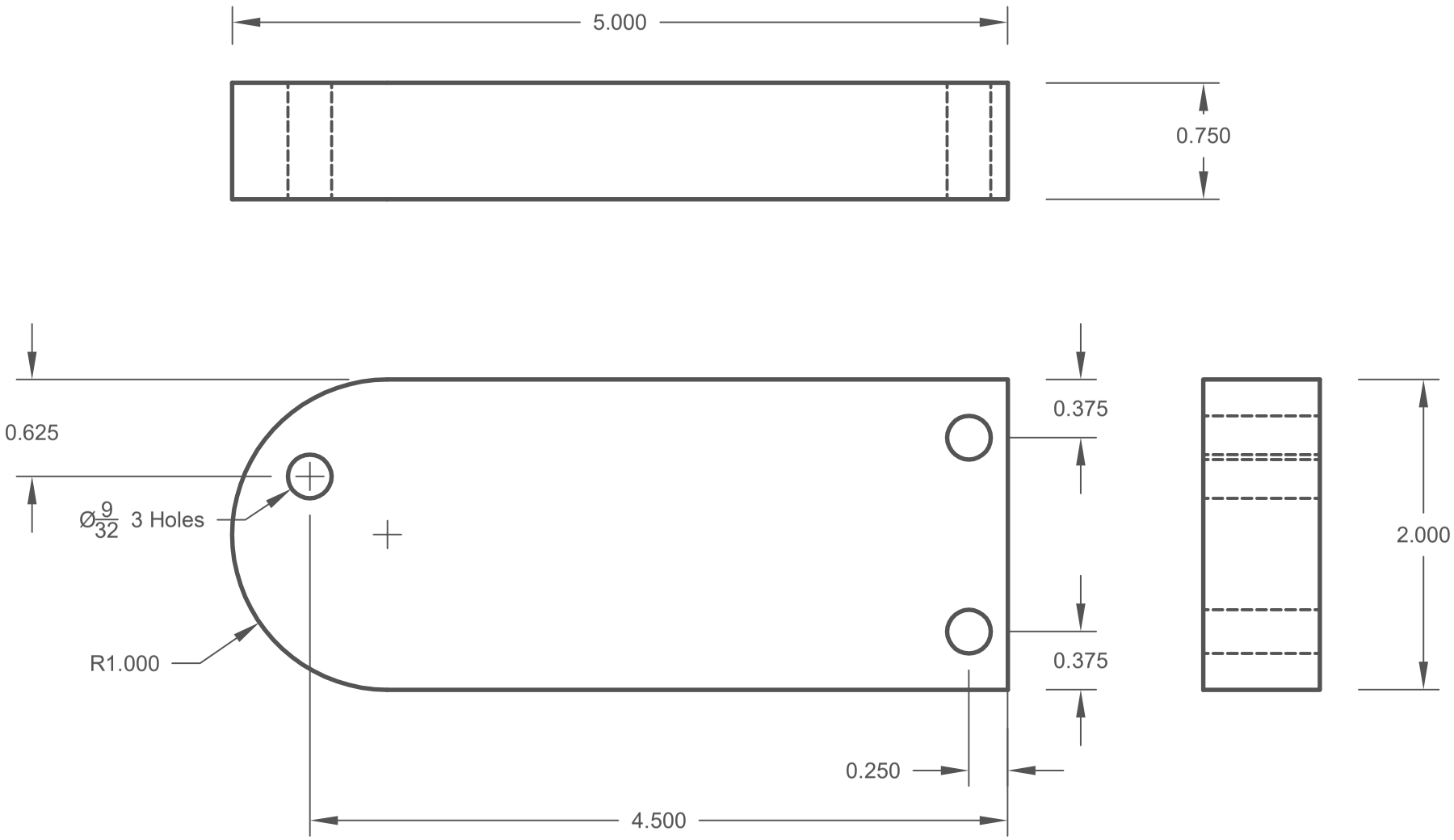

Material: Hardwood
Sand all edges and surfaces smooth
Urethane

Date: Jun-28-17	By: F. Dyer	Drawing: S 177
Description: **Brake Box Spacer**		Sheet: 1 of 1

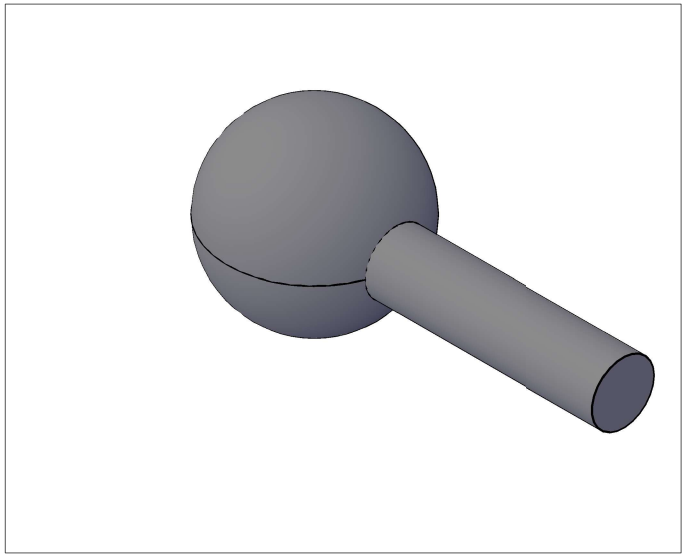

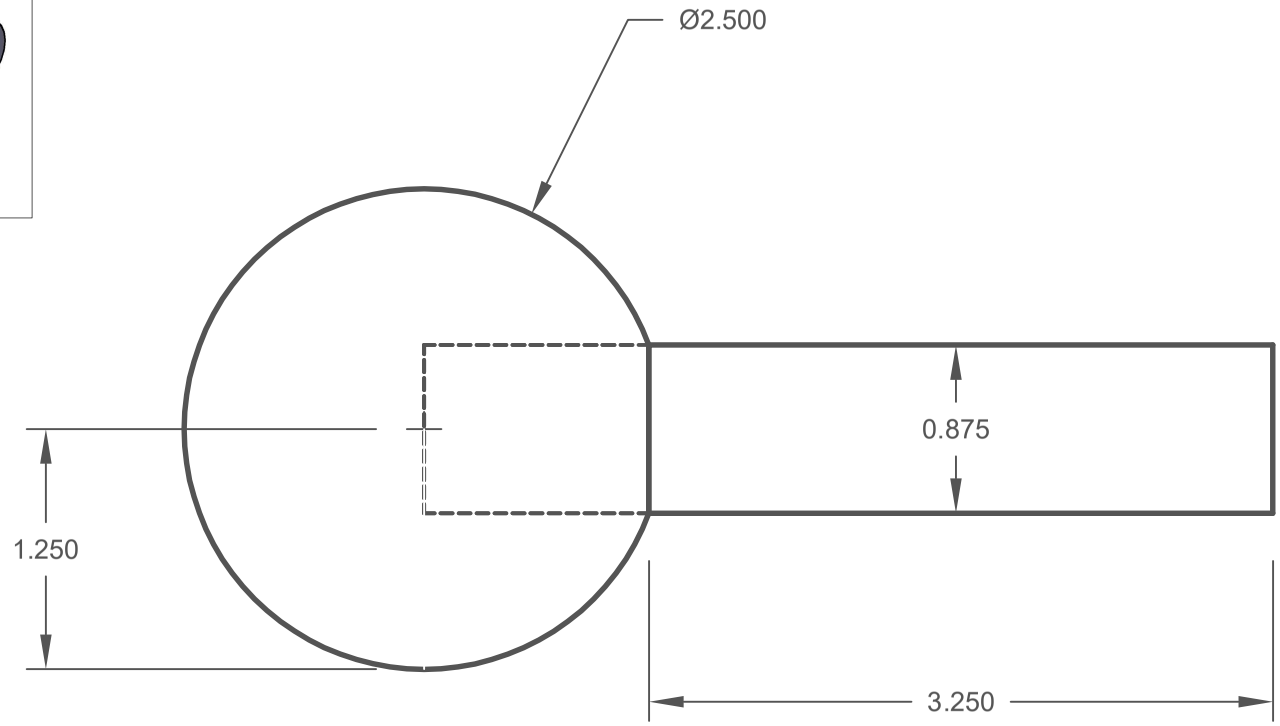

Material: Hardwood ball. Urethane

Date: Jun-28-17	By: F. Dyer	Drawing: S 170
Description: **Ball Handle**		Sheet: 1 of 1

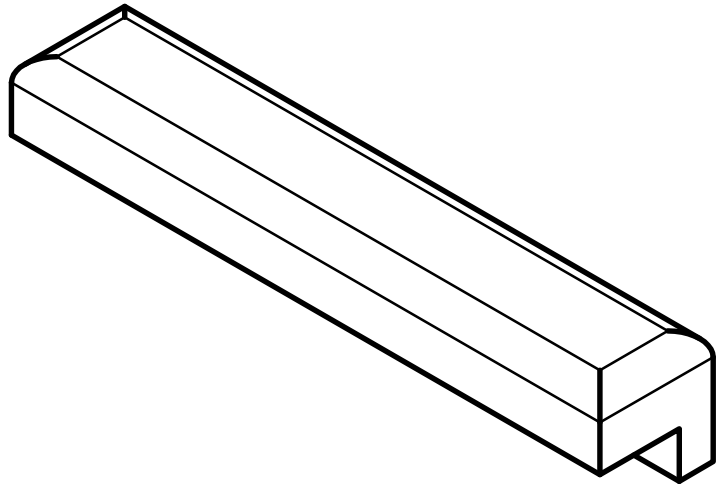

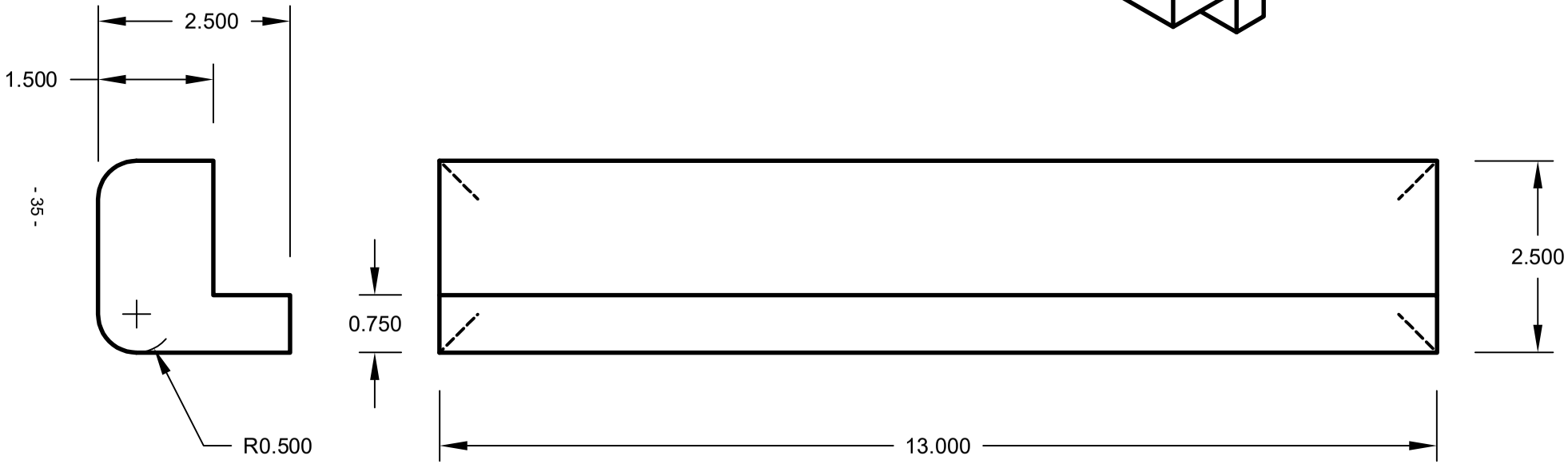

Material: Hardwood
Paint 2 coats. Urethane
Sand all edges and surfaces smooth

Date: Jun-28-17	By: F. Dyer	Drawing: S 164
Description: **Wood Arm Rest**		Sheet: 1 of 1

$\varnothing\frac{3}{16}$" dome head pop rivet

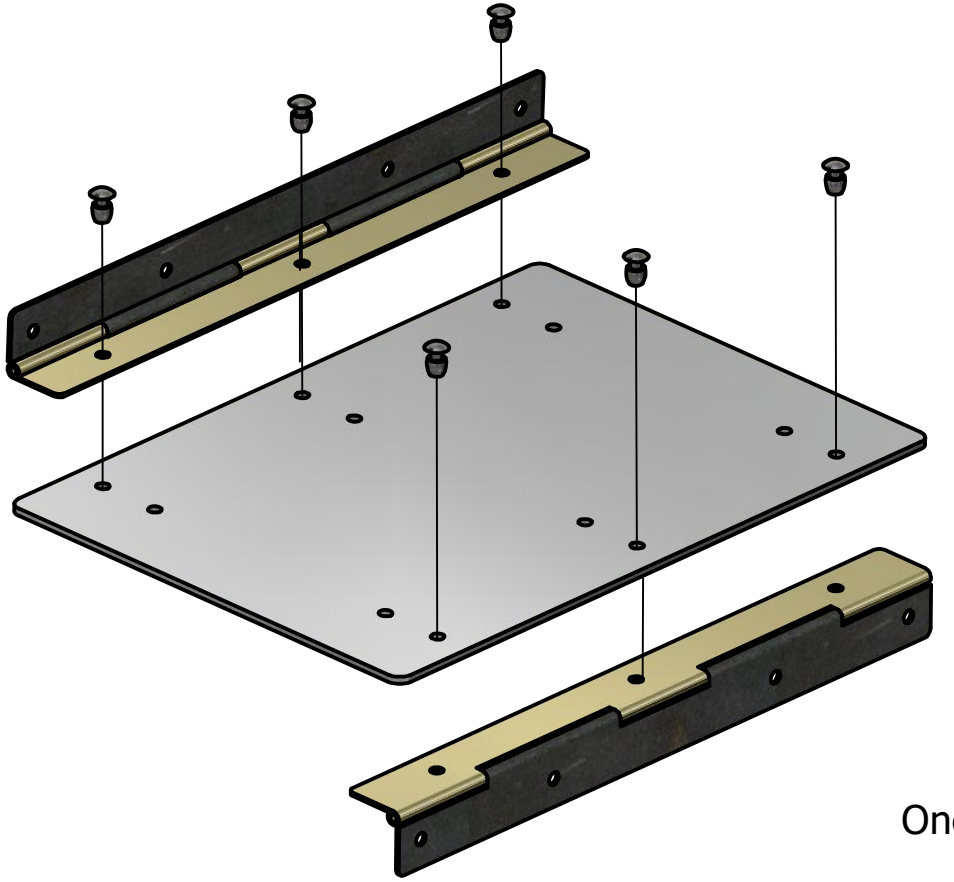

One hinge up, one hinge down

Date: 5/24/2018	By: M.Rivellino	Drawing: S 505
Description: **Top and Bottom Plate and Hinges Subassembly**		Sheet: 1 OF 1

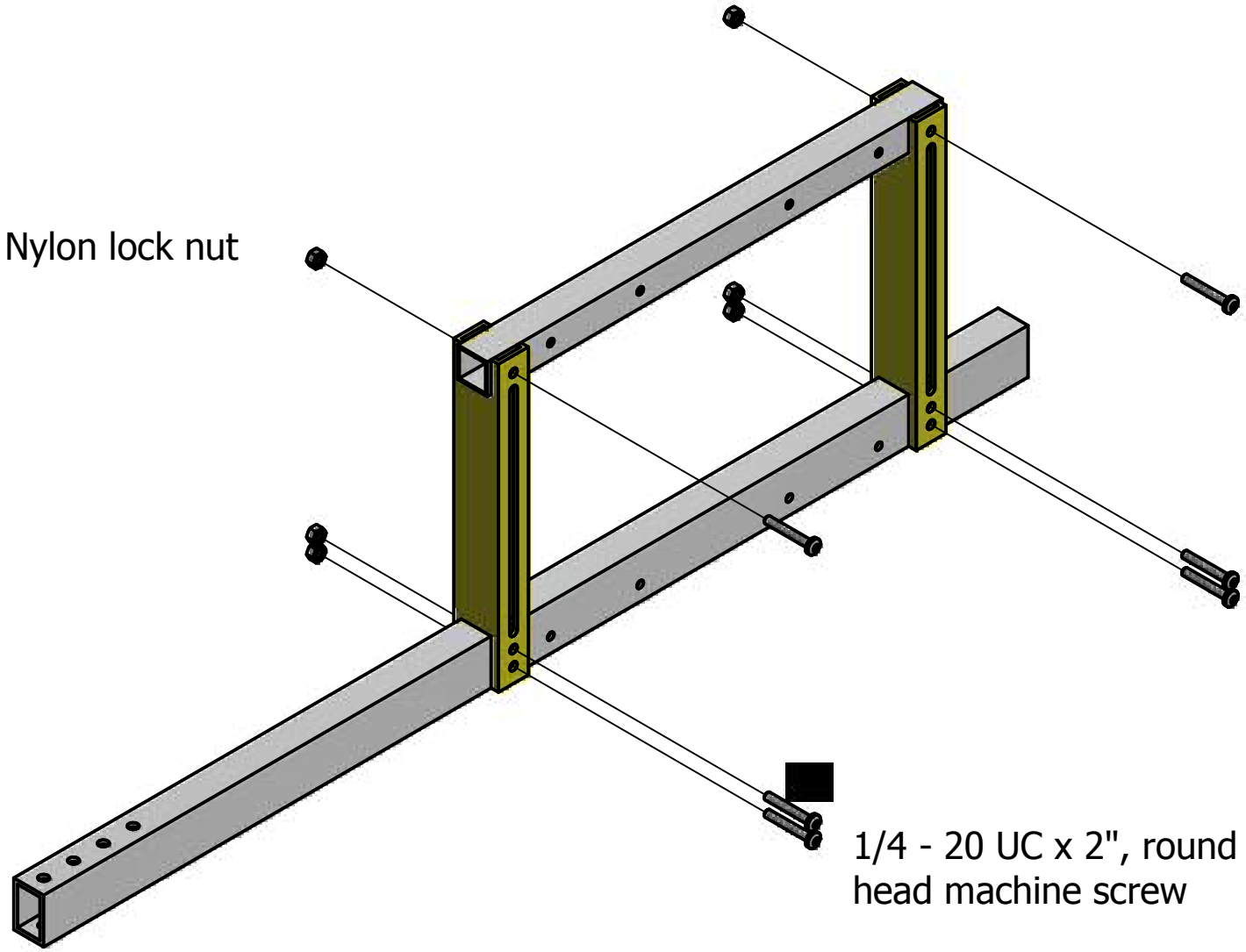

Date: Jan 11, 2017	By: F. Dyer	Drawing: S 507
Description: Sub assembly, center frame		Sheet: Page 1 of 1

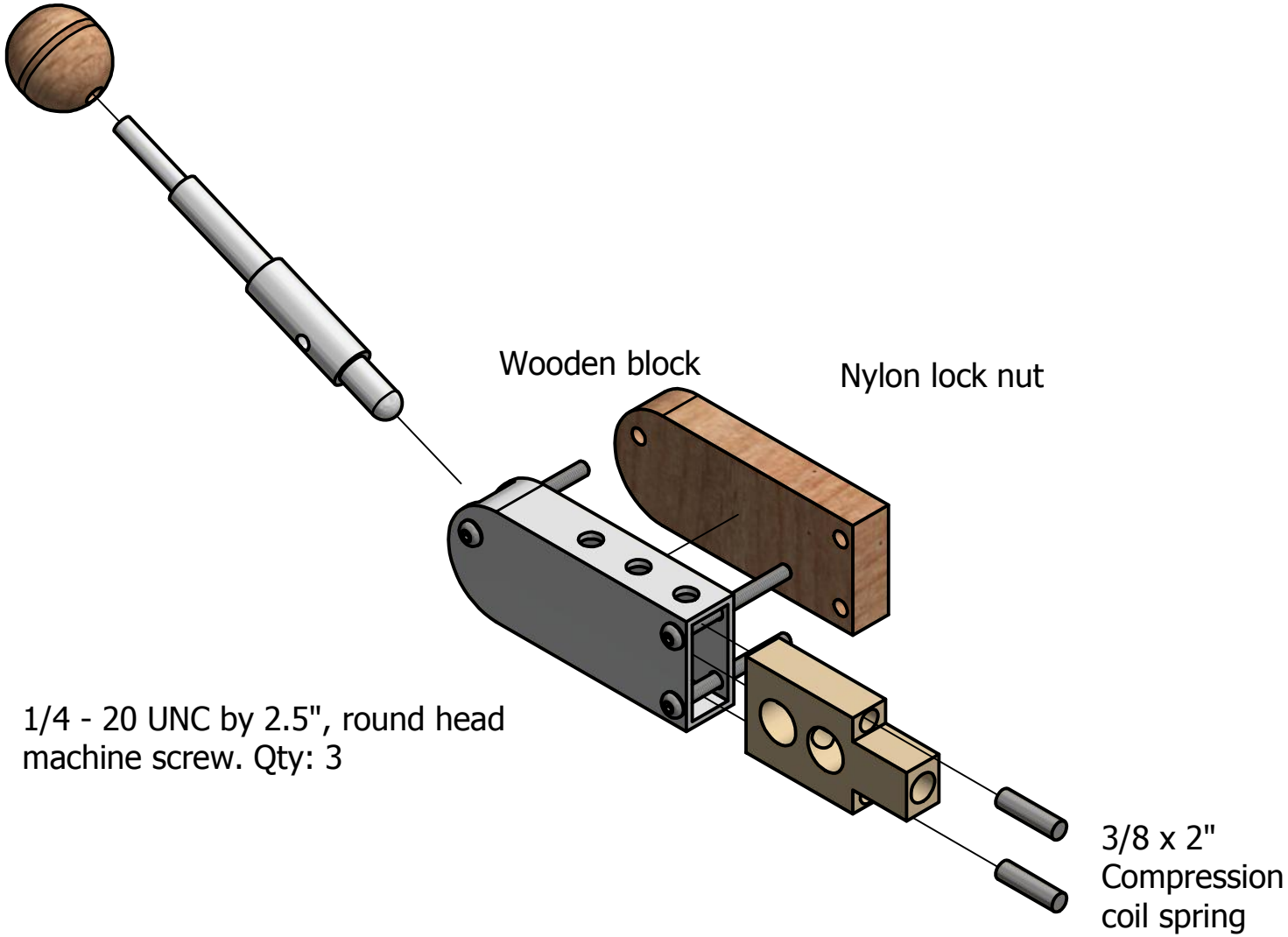

Date: Jan 11, 2017	By: F. Dyer	Drawing: S 515
Description: Brake subassembly		Sheet: 1 of 1

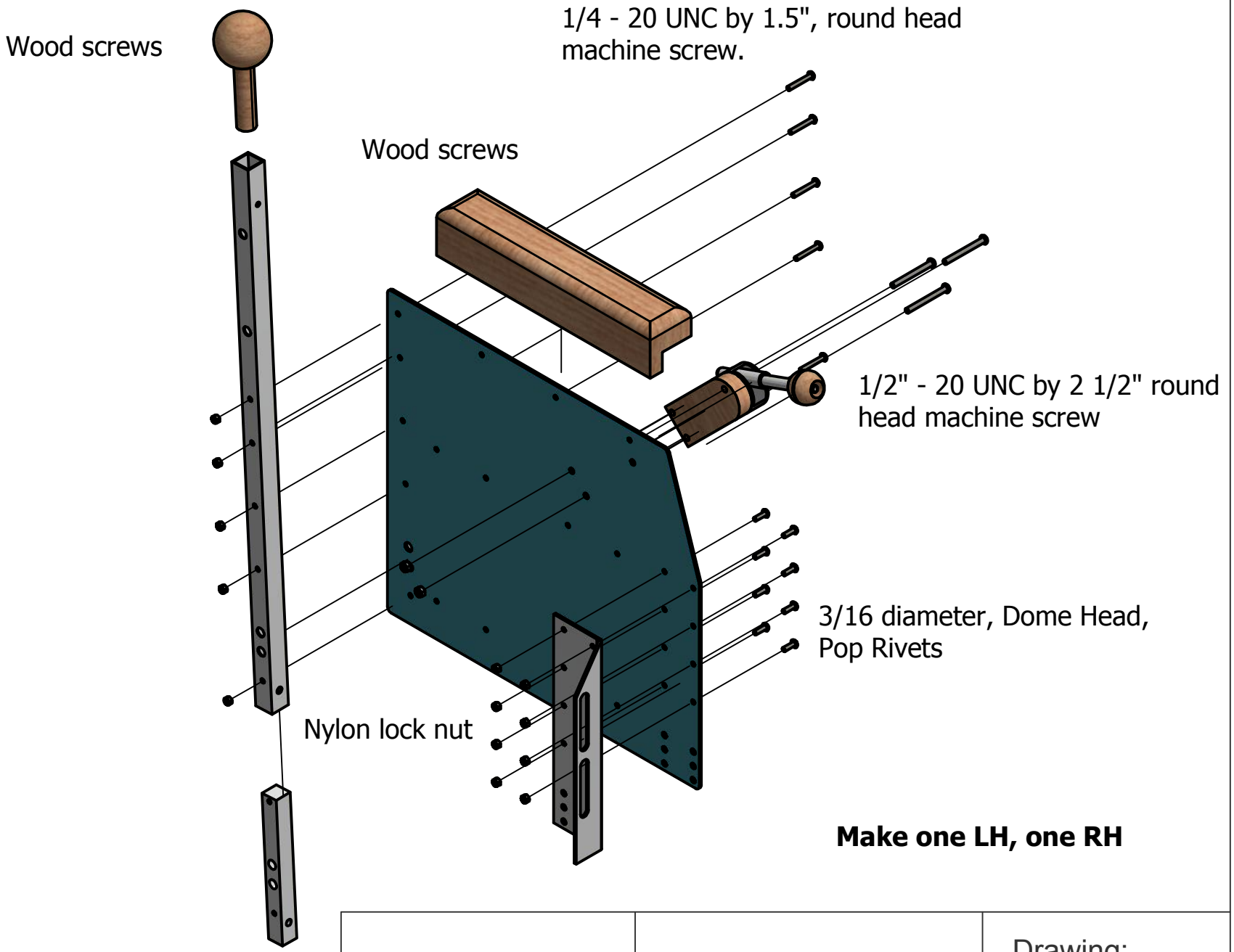

Make one LH, one RH

Date: Jan 11, 2017	By: F. Dyer	Drawing: S 516
Description: Side plate subassembly		Sheet: 1 of 1

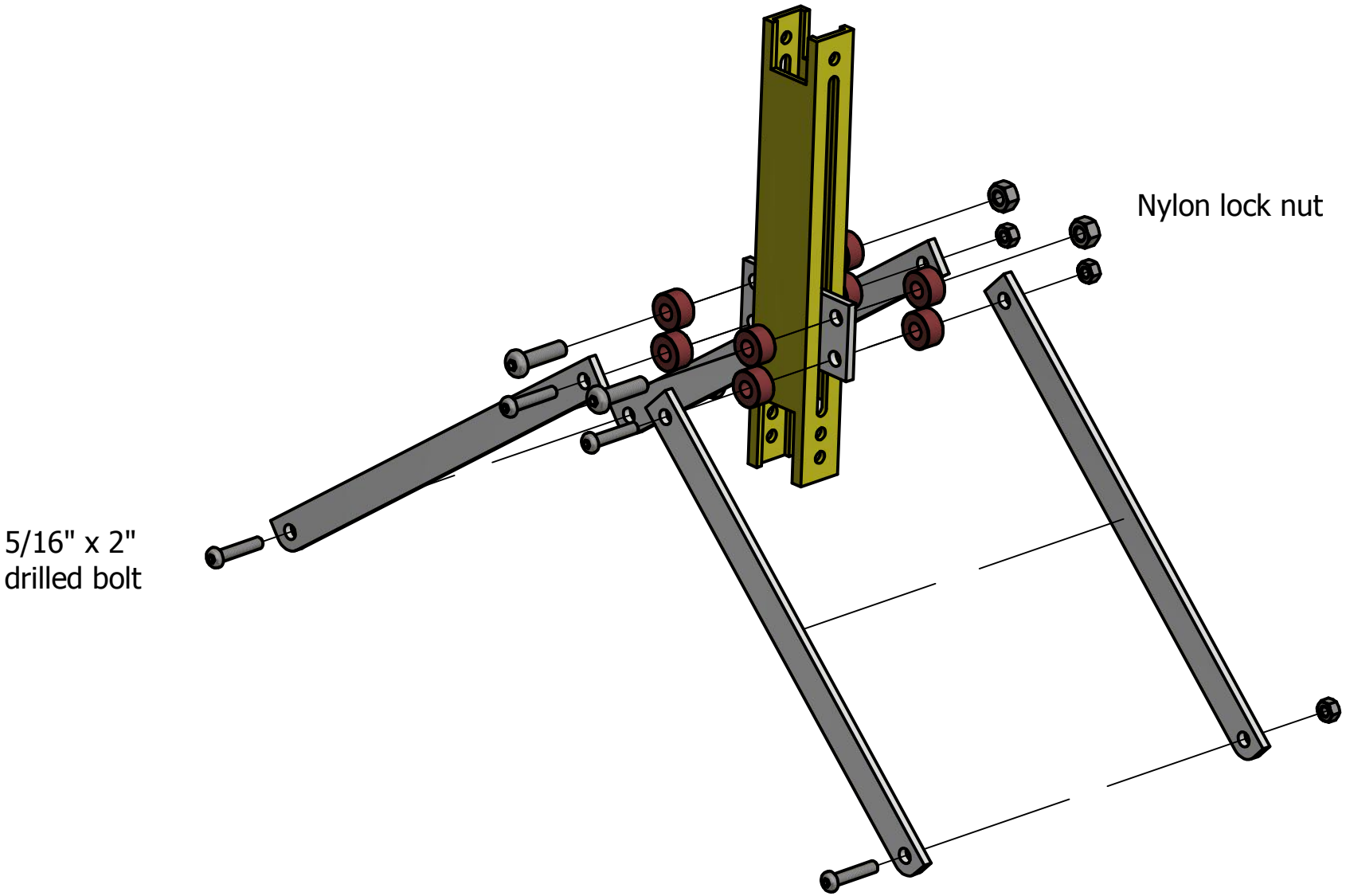

Date: Jan 11, 2017	By: F. Dyer	Drawing: S 517
Description: Slider, subassembly		Sheet: 1 of 1

SCHEDULE OF FASTENERS AND HARDWARE

MARK 2, 18 INCH WHEELCHAIR

April, 2018

ITEM	WHERE USED	Q	TOTAL Q
All material is steel, unless otherwise noted			
All dimensions are in inches			
Fasteners are Phillips or Robinson (square) Head			
Pop Rivets			
3/16 dia, for 1/16 to ¼ in. material thickness			
Dome Head, aluminum	. Hinges to 2 Side Plates	16	
	. Hinges to 4 Top and Bottom Plates	24	
	. Hinges to Center Frame Tubes, 1 top 1 bottom, both sides	16	
	. Side Plates to Handle Tube	6	
	. Doubling Plates to Side Plates	16	78
Nuts and Bolts			
3/16 - 24 UNC x 1, Rd Hd Machine Screw	. Wooden Seat Base to Top Plate	6	6

FASTENERS AND HARDWARE

ITEM	WHERE USED	Q	TOTAL Q
3/16 - 24 UNC x 1 ½, Rd Hd Mach Screw	. Handle Tube to Axle Support Insert	4	4
3/16 - 24 UNC Nyloc Lock Nut	. Above		10
3/16 Flat Washers	. Above		10
¼ - 20 UNC x 1, Rd Hd Machine Screw	. Caster Plates to Side Plates		8
¼ - 20 UNC x 1 ½ , Rd Hd Machine Screw	. Footrest Vertical Plates to Footrest Tube		2
¼ - 20 UNC x 1 ¾, Rd Hd Machine Screw	. Center Frame Assembly	6	
	. Footrest Vertical Plates to Wooden Footrest	3	9
¼ - 20 UNC x 2 ½, Rd Hd Machine Screw	. Brake Assembly Mount		6
¼ - 20 UNC, Nyloc Lock Nut	. Above	25	
	. Caster Tube U Bolts	8	
	. Footrest Eye Bolt Handle	2	35
¼ Flat Washers	. Above		35
5/16 – 18 UNC x 2 Hex Head Bolt	. Lower Strut Pivots and Top Rollers		4
5/16 – 18 UNC x 1 ½ Hex Head Bolt	. Rollers, without Struts		2

FASTENERS AND HARDWARE

ITEM	WHERE USED	Q	TOTAL Q
5/16 Flat Washers	. Rollers and Struts		12
5/16 – 18 UNC, Nyloc Lock Washers	. Rollers and Struts	6	
	. Brake Handle Knobs	2	8
½ - 13 UNC x 3 ½ , Carriage Bolt)			
Bright Finish	. Brake Adjustment		2
½ - 13 UNC, Thin Jam Nut	. Brake Adjustment		2
Wood Screws			
No 8 x ¾, Rd Hd Wood Screw	. Arm Rests to Side Plates	6	
	. Ball Handles to Handle Tube	4	10
Other			
7/16 Flat Washers	. Axle Bolts		4
3/8 dia x 2 in. long, coil, compression spring	. Brake Assembly		4

FASTENERS AND HARDWARE

ITEM	WHERE USED	Q	TOTAL Q
1 1/8 x 2 U Bolt, ¼-20UNC thread			
(1 1/8 inside of U, or 1 3/8 C to C of U)	. Caster Tube Mount		4
¼-20 UNC x 2, Eye Bolt	. Finger Handle on front of Footrest		1
Chain, Brass or Steel, 3/8 x 48 inches long			
(must pass through a 3/8 dia hole)	. Seat Back Rest		1
Chain Connector			
(threaded, C type, quick link)	. for Chain above		1

* * *

MARK 2 WHEELCHAIR

RAW MATERIAL LIST

MAJOR COMPONENTS

Jan 2018

Material Size	For Part No's	Total required for one chair
Hollow tube, aluminum		
1 " x 1" x 1/16 wall	S104, S603, S157	78 inches long
1" x 1 ½ " x 1/8	S155, S156	52 "
1" x 2" x 1/8	S174	10 "
Aluminum Sheet and Bar		
!/8 sheet	S602, S103, S117, S350	3 Ft X 4 Ft
3/16 x 1 5/8 bar	S378	6 "
3/8 x 2 ¼ bar	S125	10 "
3/16 x ¾ bar	S306	44 "
1 ¼ x 1 ¼ bar	S377	4 "
7/8 x 7/8 bar	S380	15 "
11/16 x 1 3/4 bar	S173	7 "
¾ diameter bar	S175	15 "
Continuous hinge, steel		
2" x 0.06 x 1/8 pin dia	S158	96 "